ECOSYS®

> PRINT

ECOSYS P2235dn
ECOSYS P2235dw

OPERATION GUIDE

KYOCERA
Document Solutions

Preface

Thank you for purchasing this machine.

This Operation Guide is intended to help you operate the machine correctly, perform routine maintenance, and take simple troubleshooting measures as needed so that the machine can always be used in the optimum condition.

Please read this Operation Guide before using the machine.

To maintain quality, we recommend using genuine Kyocera toner containers, which must pass numerous quality inspections.

The use of non-genuine toner containers may cause failure.

We will not be liable for any damages caused by the use of third party supplies in this machine.

A label is affixed to our genuine supplies, as shown below.

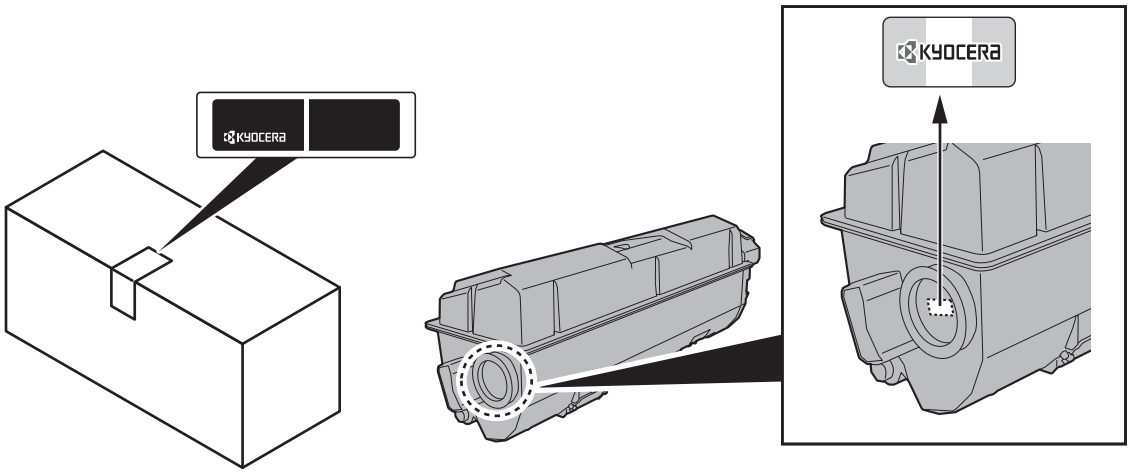

Checking the Equipment's Serial Number

The equipment's serial number is printed in the location shown in the figure.

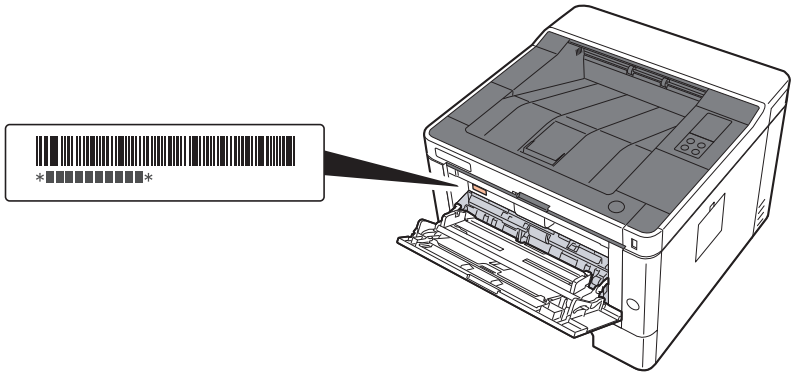

You'll need the equipment's serial number when contacting your Service Representative. Please check the number before contacting your Service Representative.

Contents

Preface i
Contents ii
Machine Features v
Guides Provided with the Machine vii
About the Operation Guide (this Guide) viii
Structure of the guide viii
Conventions Used in This Guide ix

1 Legal and Safety Information 1-1

Notice 1-2
Safety Conventions in This Guide 1-2
Environment 1-3
Precautions for Use 1-4
Laser Safety (Europe) 1-5
SAFETY OF LASER BEAM (USA) 1-6
Safety Instructions Regarding the Disconnection of Power 1-7
Compliance and Conformity 1-7
Other precautions (for users in California, the United States) 1-7
EN ISO 7779 1-7
EK1-ITB 2000 1-8
Wireless Connection (Mexico only) 1-8
Security Precautions when Using Wireless LAN (If equipped) 1-8
Limited Use of This Product (If equipped) 1-9
Legal Information 1-10
Energy Saving Control Function 1-14
Automatic 2-Sided Print Function 1-14
Resource Saving - Paper 1-14
Environmental benefits of "Power Management" 1-14
Energy Star (ENERGY STAR®) Program 1-14

2 Installing and Setting up the Machine 2-1

Part Names (Machine Exterior) 2-2
Part Names (Connectors/Interior) 2-3
Part Names (With Optional Equipments Attached) 2-5
Connecting the Machine and Other Devices 2-6
Connecting Cables 2-7
Connecting LAN Cable 2-7
Connecting USB Cable 2-8
Connecting the Power Cable 2-8
Power On/Off 2-9
Power On 2-9
Power Off 2-9
Using the Operation Panel 2-10
Operation Panel 2-10
Indicator States 2-11
Basic Functions of Each Key 2-12
Network Setup 2-13
Configuring the Wired Network 2-13
Configuring the Wireless Network 2-15
Setting Wi-Fi Direct 2-20
Energy Saver function 2-23
Auto Sleep 2-23
Power Off Rule (models for Europe) 2-23
Quiet Mode 2-24
Installing Software 2-25
Software on DVD (Windows) 2-25

Installing Software in Windows 2-26
Uninstalling the Software 2-32
Installing Software in Mac Computer 2-33
Command Center RX 2-35
Accessing Command Center RX 2-36
Changing Security Settings 2-37
Changing Device Information 2-39
E-mail Settings 2-41

3 Preparation before Use 3-1
Loading Paper 3-2
Precaution for Loading Paper 3-2
Selecting the Paper Feeder Units 3-3
Loading in the Cassettes 3-4
Precautions for Outputting Paper 3-8
Paper Stopper 3-8

4 Printing from PC 4-1
Printer Driver Properties Screen 4-2
Displaying the Printer Driver Help 4-3
Changing the Default Printer Driver Settings (Windows 8.1) 4-3
Printing from PC 4-4
Printing on Standard Sized Paper 4-4
Printing on Non-standard Sized Paper 4-6
Canceling Printing from a Computer 4-9
Printing from the Handheld Device 4-10
Printing by Google Cloud Print 4-10
Printing by Mopria 4-10
Printing with Wi-Fi Direct 4-10
Monitoring the Printer Status (Status Monitor) 4-11
Accessing the Status Monitor 4-11
Exiting the Status Monitor 4-11
Quick View State 4-11
Printing Progress Tab 4-12
Paper Tray Status Tab 4-12
Toner Status Tab 4-12
Alert Tab 4-13
Status Monitor Context Menu 4-13
Status Monitor Notification Settings 4-14
Configuration Tool 4-15
Accessing the Configuration Tool 4-15
Exiting the Configuration Tool 4-16
Configuration Tool Settings Screen 4-17

5 Operation on the Machine 5-1
Loading Paper in the Multipurpose Tray 5-2
Pausing and Resuming a Job 5-5
Canceling Jobs 5-5
Print Report 5-6

6 Troubleshooting 6-1
Regular Maintenance 6-2
Cleaning 6-2
Cleaning the inside of the Machine 6-2
Toner Container Replacement 6-6
Loading Paper 6-9

Using the Maintenance Menu **6-10**
Troubleshooting **6-11**
Solving Malfunctions 6-11
Machine Operation Trouble 6-11
Printed Image Trouble 6-13
Indicator pattern when an error occurs **6-16**
Maintenance Indication 6-16
Error Indication 6-26
Clearing Paper Jams **6-28**
Remove any jammed paper in the Multipurpose Tray 6-29
Remove any jammed paper in Cassette 1 6-30
Remove any jammed paper in Cassette 2 6-32
Remove any jammed paper in Cassette 3 6-34
Remove any jammed paper in Rear Cover 6-36
Remove any jammed paper inside of the Machine 6-40

7 Appendix **7-1**
Optional Equipment **7-2**
Overview of Optional Equipment 7-2
Paper **7-5**
Basic Paper Specifications 7-5
Choosing the Appropriate Paper 7-6
Special Paper 7-9
Specifications **7-13**
Machine 7-13
Printer Functions 7-15
Paper Feeder 7-16
Glossary **7-17**
Index **Index-1**

Machine Features

The machine is equipped with many useful functions.

Here are some examples.

Save energy and cost		
Save energy as needed (Energy Saver function) 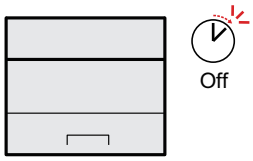 The machine is equipped with Energy Saver function that automatically switched into Sleep Mode. ➡ Energy Saver function (page 2-23)	**Use less toner for printing (EcoPrint)** You can save toner consumption with this function. When you only need to check the printed content, such as a trial print run or documents for internal confirmation, use this function to save toner. Use this function when a high-quality print is not required.	**Reduce paper use (Paper Saving Printing)** 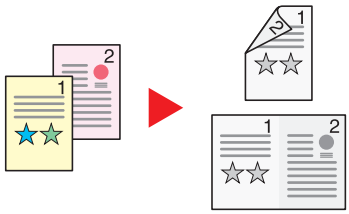 You can print originals on both sides of the paper. You can also print multiple originals onto one sheet.

Strengthen security	Use functions more efficiently	
Strengthen security (Settings for Administrator) 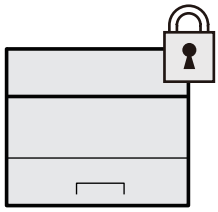 Various functions are available for administrators to strengthen security. ➡ Changing Security Settings (page 2-37)	**Make the machine quiet (Quiet Mode)** 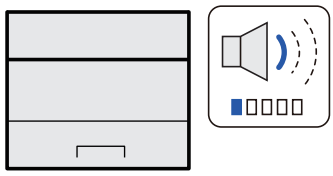 You can make the machine quiet by reducing its running noise. ON/OFF switching by one-touch is possible. ➡ Quiet Mode (page 2-24)	**Install the machine without concerning the network cables (Wireless Network)** 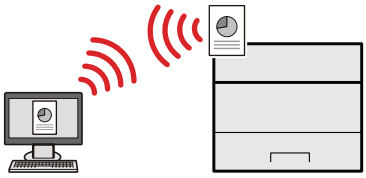 If there is a wireless LAN environment, it is possible to install the unit without worrying about the network wiring. In addition, Wi-Fi Direct, etc. are supported. ➡ Configuring the Wireless Network (page 2-15) Setting Wi-Fi Direct (page 2-20)

Use functions more efficiently

Perform remote operation (Command Center RX)

You can access to the machine remotely to print, send or download data.

Administrators can configure the machine behavior or management settings.

Command Center RX (page 2-35)

Guides Provided with the Machine

The following guides are provided with the machine. Refer to each guide as needed.

The contents of the guides are subject to change without notice for the purpose of improvement of machine performance.

Printed guides

Start using the machine quickly	**Quick Guide** Explains how to use basic functions of the machine, how to use convenient features, how to perform routine maintenance, and what to do when problems occur.
For safe use of the machine	**Safety Guide** Provides safety and cautionary information for installation environment and use of the machine. Be sure to read this guide before using the machine. **Safety Guide (ECOSYS P2235dn/ECOSYS P2235dw)** Indicates the space required for machine installation, and describes the cautionary labels and other safety information. Be sure to read this guide before using the machine.

Guides (PDF) on the DVD (Product Library)

Use the machine thoughtfully	**Operation Guide (This Guide)** Explains how to load paper and perform basic operations, and indicates default settings and other information.
Easily register machine information and configure settings	**Command Center RX User Guide** Explains how to access the machine from a Web browser on your computer to check and change settings.
Print data from a computer	**Printer Driver User Guide** Explains how to install the printer driver and use the printer function.
Directly print a PDF file	**KYOCERA Net Direct Print Operation Guide** Explains how to print PDF files without launching Adobe Acrobat or Reader.
Monitor the machine and printers on the network	**KYOCERA Net Viewer User Guide** Explains how to monitor your network printing system (the machine) with KYOCERA Net Viewer.
Print without using the printer driver	**PRESCRIBE Commands Command Reference** Describes the native printer language (PRESCRIBE commands). **PRESCRIBE Commands Technical Reference** Describes the PRESCRIBE command functions and control for each type of emulation.
Adjust the print position	**Maintenance Menu User Guide** Maintenance Menu provides the explanation on how to configure the print settings.

Install the following versions of Adobe Reader to view the manuals on the DVD.
Version 8.0 or later

About the Operation Guide (this Guide)

Structure of the guide

The Operation Guide contains the following chapters.

Chapter		Contents
1	**Legal and Safety Information**	Provides precautions regarding use of the machine and trademark information.
2	**Installing and Setting up the Machine**	Explains part names, cable connections, installation of the software, login, logout, and other matters related to administration of the machine.
3	**Preparation before Use**	Explains preparations and settings that are required in order to use the machine, such as how to load paper.
4	**Printing from PC**	Explains the basic steps for printing.
5	**Operation on the Machine**	This explains basic procedures for operating the machine.
6	**Troubleshooting**	Explains what to do when toner runs out, an error is displayed, or a paper jam or other problem occurs.
7	**Appendix**	Describes convenient options that are available for the machine. Provides information on media types and paper sizes, and gives a glossary of terms. Explains lists the specifications of the machine.

Conventions Used in This Guide

Adobe Reader XI is used as an example in the explanations below.

Click an item in the Table of Contents to jump to the corresponding page.

Click to move from the current page to the previously displayed page. This is convenient when you want to return to the page from which you jumped to the current page.

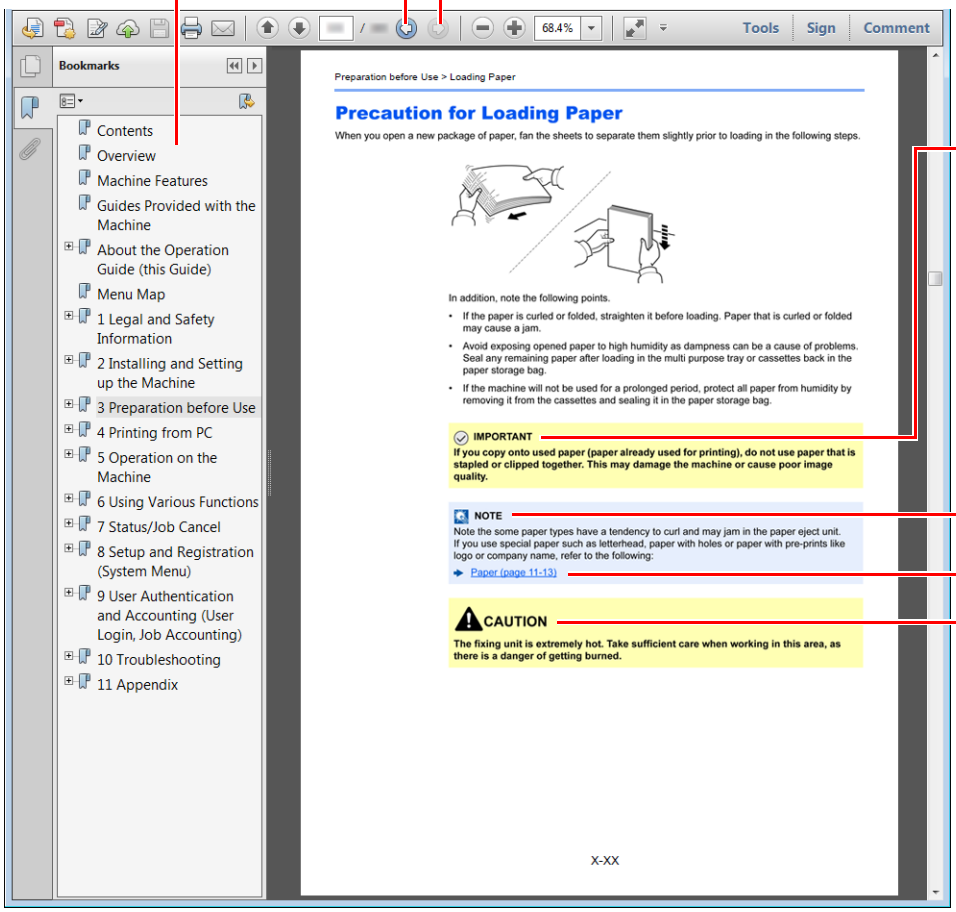

IMPORTANT

Indicates operational requirements and restrictions to operate the machine correctly, and avoid damage to the machine or property.

NOTE

Indicates supplemental explanations and reference information for operations.

Refer to

Click the underlined text to jump to the corresponding page.

CAUTION

Indicates that personal injury or mechanical damage may result from insufficient attention to or incorrect compliance with the related points.

NOTE

The items that appear in Adobe Reader vary depending on how it is used. If the Table of Contents or tools do not appear, refer to Adobe Reader Help.

Certain items are indicated in this guide by the conventions described below.

Convention	Description
[**Bold**]	Indicates keys and buttons.
"Regular"	Indicates a setting.

Size and Orientation of Paper

Paper sizes such as A5 can be used in both the horizontal and vertical orientations. To distinguish the orientations when these sizes are used, "R" is added to sizes used in the vertical orientation.

Orientation		Setting Position (X=Length, Y=Width)	Indicated size in this Guide*1
Vertical orientation (-R)	Cassette	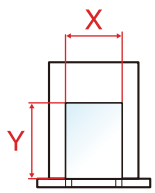	A5-R
	Multipurpose Tray	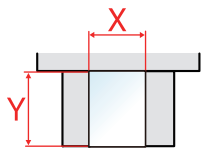	A5-R
Horizontal orientation	Cassette	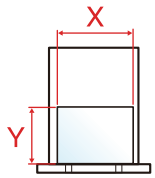	A5
	Multipurpose Tray	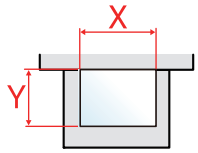	A5

*1 Paper sizes that can be used vary depending on the function and source tray. For details, refer to the following.

➡ Specifications (page 7-13)

1 Legal and Safety Information

Please read this information before using your machine. This chapter provides information on the following topics.

Notice 1-2
Safety Conventions in This Guide 1-2
Environment 1-3
Precautions for Use 1-4
Laser Safety (Europe) 1-5
SAFETY OF LASER BEAM (USA) 1-6
Safety Instructions Regarding the Disconnection of Power 1-7
Compliance and Conformity 1-7
Other precautions (for users in California, the United States) 1-7
EN ISO 7779 1-7
EK1-ITB 2000 1-8
Wireless Connection (Mexico only) 1-8
Security Precautions when Using Wireless LAN (If equipped) 1-8
Limited Use of This Product (If equipped) 1-9
Legal Information 1-10
Energy Saving Control Function 1-14
Automatic 2-Sided Print Function 1-14
Resource Saving - Paper 1-14
Environmental benefits of "Power Management" 1-14
Energy Star (ENERGY STAR®) Program 1-14

Notice

Safety Conventions in This Guide

The sections of this guide and parts of the machine marked with symbols are safety warnings meant to protect the user, other individuals and surrounding objects, and ensure correct and safe usage of the machine. The symbols and their meanings are indicated below.

WARNING: Indicates that serious injury or even death may result from insufficient attention to or incorrect compliance with the related points.

CAUTION: Indicates that personal injury or mechanical damage may result from insufficient attention to or incorrect compliance with the related points.

Symbols

The △ symbol indicates that the related section includes safety warnings. Specific points of attention are indicated inside the symbol.

... [General warning]

... [Warning of high temperature]

The ⃠ symbol indicates that the related section includes information on prohibited actions. Specifics of the prohibited action are indicated inside the symbol.

... [Warning of prohibited action]

... [Disassembly prohibited]

The ● symbol indicates that the related section includes information on actions which must be performed. Specifics of the required action are indicated inside the symbol.

... [Alert of required action]

... [Remove the power plug from the outlet]

... [Always connect the machine to an outlet with a ground connection]

Please contact your service representative to order a replacement if the safety warnings in this Operation Guide are illegible or if the guide itself is missing (fee required).

Environment

The service environmental conditions are as follows:

Temperature	50 to 90.5°F (10 to 32.5°C)
Humidity	10 to 80%

Avoid the following locations when selecting a site for the machine.

- Avoid locations near a window or with exposure to direct sunlight.
- Avoid locations with vibrations.
- Avoid locations with drastic temperature fluctuations.
- Avoid locations with direct exposure to hot or cold air.
- Avoid poorly ventilated locations.

If the floor is delicate against casters, when this machine is moved after installation, the floor material may be damaged.

During printing, some ozone is released, but the amount does not cause any ill effect to one's health. If, however, the machine is used over a long period of time in a poorly ventilated room or when making an extremely large number of prints, the smell may become unpleasant. To maintain the appropriate environment for print work, it is suggested that the room be properly ventilated.

Precautions for Use

Cautions when handling consumables

CAUTION

Do not attempt to incinerate parts which contain toner. Dangerous sparks may cause burns.

Keep parts which contain toner out of the reach of children.

If toner happens to spill from parts which contain toner, avoid inhalation and ingestion, as well as contact with your eyes and skin.

- If you do happen to inhale toner, move to a place with fresh air and gargle thoroughly with a large amount of water. If coughing develops, contact a physician.
- If you do happen to ingest toner, rinse your mouth with water and drink 1 or 2 cups of water to dilute the contents of your stomach. If necessary, contact a physician.
- If you do happen to get toner in your eyes, flush them thoroughly with water. If there is any remaining tenderness, contact a physician.
- If toner does happen to get on your skin, wash with soap and water.

Do not attempt to force open or destroy parts which contain toner.

Other precautions

Return the exhausted toner container to your dealer or service representative. The collected toner container will be recycled or disposed in accordance with the relevant regulations.

Store the machine while avoiding exposure to direct sunlight.

Store the machine in a place where the temperature stays below 40°C while avoiding sharp changes of temperature and humidity.

If the machine will not be used for an extended period of time, remove the paper from the cassette and the Multipurpose (MP) Tray, return it to its original package and reseal it.

Laser Safety (Europe)

Laser radiation could be hazardous to the human body. For this reason, laser radiation emitted inside this machine is hermetically sealed within the protective housing and external cover. In the normal operation of the product by user, no radiation can leak from the machine.

This machine is classified as Class 1 laser product under IEC/EN 60825-1:2014.

Regarding CLASS 1 laser products, information is provided on the rating label.

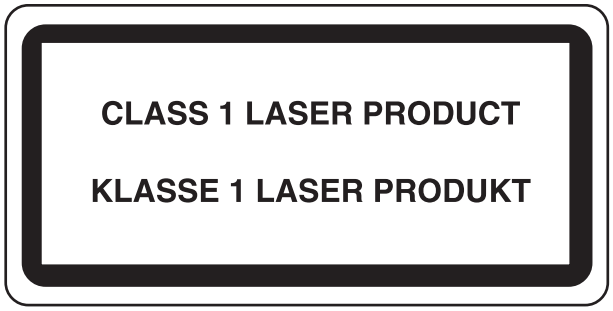

SAFETY OF LASER BEAM (USA)

1. Safety of laser beam

This machine has been certified by the manufacturer to Class 1 level under the radiation performance standards established by the U.S.DHHS (Department of Health and Human Services) in 1968. This indicates that the product is safe to use during normal operation and maintenance. The laser optical system, enclosed in a protective housing and sealed within the external covers, never permits the laser beam to escape.

2. The CDRH Act

A laser-product-related act was implemented on Aug. 2, 1976, by the Center for Devices and Radiological Health (CDRH) of the U.S. Food and Drug Administration (FDA). This act prohibits the sale of laser products in the U.S. without certification, and applies to laser products manufactured after Aug. 1, 1976. The label shown below indicates compliance with the CDRH regulations and must be attached to laser products marketed in the United States. The position of the rating label is show below.

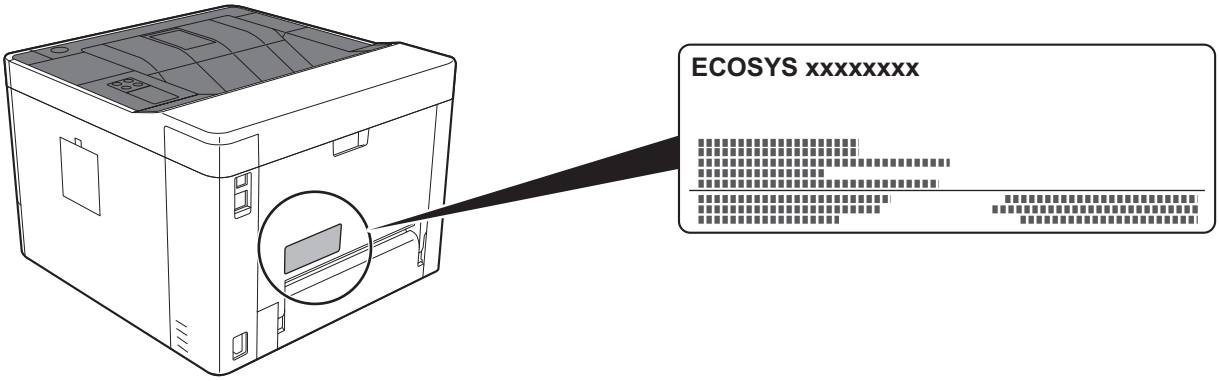

3. Maintenance

For safety of the service personnel, follow the maintenance instructions in the other section of this manual.

4. Safety switch

The power to the laser unit is cut off when the front cover is opened.

Safety Instructions Regarding the Disconnection of Power

Caution: The power plug is the main isolation device! Other switches on the equipment are only functional switches and are not suitable for isolating the equipment from the power source.

Attention: Le débranchement de la fiche secteur est le seul moyen de mettre l'appareil hors tension. Les interrupteurs sur l'appareil ne sont que des interrupteurs de fonctionnement: ils ne mettent pas l'appareil hors tension.

Compliance and Conformity

This equipment has been tested and found to comply with the limits for a Class B digital device, pursuant to Part 15 of the FCC Rules.

These limits are designed to provide reasonable protection against harmful interference in a residential installation. This equipment generates, uses and can radiate radio frequency energy and, if not installed and used in accordance with the instructions, may cause harmful interference to radio communications. However, there is no guarantee that interference will not occur in a particular installation. If this equipment does cause harmful interference to radio or television reception, which can be determined by turning the equipment off and on, the user is encouraged to try to correct the interference by one or more of the following measures:

- Reorient or relocate the receiving antenna.
- Increase the separation between the equipment and receiver.
- Connect the equipment into an outlet on a circuit different from that to which the receiver is connected.
- Consult the dealer or an experienced radio/TV technician for help.
- The use of a non-shielded interface cable with the referenced device is prohibited.

CAUTION — The changes or modifications not expressly approved by the party responsible for compliance could void the user's authority to operate the equipment.

This device complies with Part 15 of FCC Rules.

Operation is subject to the following two conditions; (1) this device may not cause harmful interference, and (2) this device must accept any interference received, including interference that may cause undesired operation.

This device complies with Industry Canada licence-exempt RSS standard(s). Operation is subject to the following two conditions: (1) this device may not cause interference, and (2) this device must accept any interference, including interference that may cause undesired operation of the device.

The antenna(s) used for this transmitter must be installed to provide a separation distance of at least 20 cm from all persons and must not be co-located or operating in conjunction with any other transmitter.

* The above statements are valid only in the United States of America and Canada.

NOTE — Use shielded interface cables.

Other precautions (for users in California, the United States)

Perchlorate Material - special handling may apply. See *www.dtsc.ca.gov/hazardouswaste/perchlorate*.

EN ISO 7779

Maschinenlärminformations-Verordnung 3. GPSGV, 06.01.2004: Der höchste Schalldruckpegel beträgt 70 dB (A) oder weniger gemäß EN ISO 7779.

EK1-ITB 2000

Das Gerät ist nicht für die Benutzung im unmittelbaren Gesichtsfeld am Bildschirmarbeitsplatz vorgesehen. Um störende Reflexionen am Bildschirmarbeitsplatz zu vermeiden, darf dieses Produkt nicht im unmittelbaren Gesichtsfeld platziert werden.

Wireless Connection (Mexico only)

The operation of this equipment is subject to the following two conditions:

(1) it is possible that this equipment or device may not cause harmful interference, and (2) this equipment or device must accept any interference, including interference that may cause undesired operation.

La operación de este equipo está sujeta a las siguientes dos condiciones:

(1) es posible que este equipo o dispositivo no cause interferencia perjudicial y (2) este equipo o dispositivo debe aceptar cualquier interferencia, incluyendo la que pueda causar su operación no deseada.

Security Precautions when Using Wireless LAN (If equipped)

Wireless LAN allows information to be exchanged between wireless access points instead of using a network cable, which offers the advantage that a LAN connection can be established freely within an area in which radio waves can be transmitted.

On the other hand, the following problems may occur if security settings are not configured, because radio waves can pass through obstacles (including walls) and reach everywhere within a certain area.

Secretly Viewing Communication Contents

A third person with malicious objectives may intentionally monitor radio waves and gain unauthorized access to the following communication contents.

- Personal information including ID, passwords, and credit card numbers
- Contents of email messages

Illegal Intrusion

A third party with malicious intent may gain unauthorized access to personal or company networks and conduct the following illegal actions.

- Extracting personal and confidential information (information leak)
- Entering into communication while impersonating a specific person and distributing unauthorized information (spoofing)
- Modifying and retransmitting intercepted communications (falsification)
- Transmitting computer viruses and destroying data and systems (destruction)

Wireless LAN cards and wireless access points contain built-in security mechanisms to address these problems and to reduce the possibility of these problems occurring by configuring the security settings of wireless LAN products when the product is used.

We recommend that customers take responsibility and use their judgment when configuring the security settings and that they ensure that they fully understand the problems that can occur when the product is used without configuring the security settings.

Limited Use of This Product (If equipped)

- Radio waves transmitted from this product may affect medical equipment. When using this product in a medical institution or in the vicinity of medical instruments, either use this product according to the instructions and precautions provided by the administrator of the institution or those provided on the medical instruments.
- Radio waves transmitted from this product may affect automatic control equipment including automatic doors and fire alarms. When using this product in the vicinity of the automatic control equipment, use this product according to the instructions and precautions provided on the automatic control equipment.
- If this product is used in devices that are directly related to service including airplanes, trains, ships, and automobiles or this product is used in applications requiring high reliability and safety to function and in devices requiring accuracy including those used in disaster prevention and crime prevention and those used for various safety purposes, please use this product after considering the safety design of the entire system including adoption of a failsafe design and redundancy design for reliability and safety maintenance of the entire system. This product is not intended for use in applications requiring high reliability and safety including aerospace instruments, trunk communication equipment, nuclear power control equipment, and medical equipment; hence, the decision as to whether to use this product in these applications needs to be fully considered and determined.

Legal Information

Copying or other reproduction of all or part of this guide without the prior written consent of KYOCERA Document Solutions Inc. is prohibited.

Regarding Trade Names

- PRESCRIBE and ECOSYS are registered trademark of Kyocera Corporation.
- KPDL is a trademark of Kyocera Corporation.
- Microsoft, Windows, Windows XP, Windows Server 2003, Windows Vista, Windows Server 2008, Windows 7, Windows Server 2012, Windows 8, Windows 8.1, Windows 10 and Internet Explorer are registered trademarks or trademarks of Microsoft Corporation in the U.S.A. and/or other countries.
- PCL is a trademark of Hewlett-Packard Company.
- Adobe Acrobat, Adobe Reader and PostScript are trademarks of Adobe Systems Incorporated.
- Ethernet is a registered trademark of Xerox Corporation.
- Novell and NetWare are registered trademarks of Novell, Inc.
- IBM and IBM PC/AT are trademarks of International Business Machines Corporation.
- AppleTalk, Bonjour, Macintosh, and Mac OS are trademarks of Apple Inc., registered in the U.S. and other countries.
- All European language fonts installed in this machine are used under licensing agreement with Monotype Imaging Inc.
- Helvetica, Palatino and Times are registered trademarks of Linotype GmbH.
- ITC Avant Garde Gothic, ITC Bookman, ITC ZapfChancery and ITC ZapfDingbats are registered trademarks of International Typeface Corporation.
- ThinPrint is a trademark of Cortado AG in Germany and other countries.
- UFST™ MicroType® fonts by Monotype Imaging Inc. are installed in this machine.
- This machine contains the software having modules developed by Independent JPEG Group.
- iPad, iPhone and iPod touch are trademarks of Apple Inc., registered in the U.S. and other countries.
- iOS is a trademark or registered trademark of Cisco in the U.S. and other countries and is used under license by Apple Inc.
- Google and Google Cloud Print™ are trademarks and/or registered trademarks of Google Inc.
- Mopria™ is registered trademarks of Mopria™ Alliance.
- Wi-Fi and Wi-Fi Direct are trademarks and/or registered trademarks of Wi-Fi Alliance.

All other brands and product names are registered trademarks or trademarks of their respective companies. The designations ™ and ® will not be used in this Operation Guide.

GPL/LGPL

This product contains GPL (http://www.gnu.org/licenses/gpl.html) and/or LGPL (http://www.gnu.org/licenses/lgpl.html) software as part of its firmware. You can get the source code, and you are permitted to copy, redistribute and modify it under the terms of GPL/LGPL. For further information including availability of the source code, visit http://www.kyoceradocumentsolutions.com/gpl/.

OpenSSL License

Copyright (c) 1998-2006 The OpenSSL Project. All rights reserved.

Redistribution and use in source and binary forms, with or without modification, are permitted provided that the following conditions are met:

1. Redistributions of source code must retain the above copyright notice, this list of conditions and the following disclaimer.
2. Redistributions in binary form must reproduce the above copyright notice, this list of conditions and the following disclaimer in the documentation and/or other materials provided with the distribution.
3. All advertising materials mentioning features or use of this software must display the following acknowledgment: "This product includes software developed by the OpenSSL Project for use in the OpenSSL Toolkit. (http://www.openssl.org/)"
4. The names "OpenSSL Toolkit" and "OpenSSL Project" must not be used to endorse or promote products derived from this software without prior written permission.
   For written permission, please contact openssl-core@openssl.org.
5. Products derived from this software may not be called "OpenSSL" nor may "OpenSSL" appear in their names without prior written permission of the OpenSSL Project.
6. Redistributions of any form whatsoever must retain the following acknowledgment: "This product includes software developed by the OpenSSL Project for use in the OpenSSL Toolkit (http://www.openssl.org/)"

THIS SOFTWARE IS PROVIDED BY THE OpenSSL PROJECT "AS IS" AND ANY EXPRESSED OR IMPLIED WARRANTIES, INCLUDING, BUT NOT LIMITED TO, THE IMPLIED WARRANTIES OF MERCHANTABILITY AND FITNESS FOR A PARTICULAR PURPOSE ARE DISCLAIMED. IN NO EVENT SHALL THE OpenSSL PROJECT OR ITS CONTRIBUTORS BE LIABLE FOR ANY DIRECT, INDIRECT, INCIDENTAL, SPECIAL, EXEMPLARY, OR CONSEQUENTIAL DAMAGES (INCLUDING, BUT NOT LIMITED TO, PROCUREMENT OF SUBSTITUTE GOODS OR SERVICES; LOSS OF USE, DATA, OR PROFITS; OR BUSINESS INTERRUPTION) HOWEVER CAUSED AND ON ANY THEORY OF LIABILITY, WHETHER IN CONTRACT, STRICT LIABILITY, OR TORT (INCLUDING NEGLIGENCE OR OTHERWISE) ARISING IN ANY WAY OUT OF THE USE OF THIS SOFTWARE, EVEN IF ADVISED OF THE POSSIBILITY OF SUCH DAMAGE.

Original SSLeay License

Copyright (C) 1995-1998 Eric Young (eay@cryptsoft.com) All rights reserved.

This package is an SSL implementation written by Eric Young (eay@cryptsoft.com). The implementation was written so as to conform with Netscapes SSL.

This library is free for commercial and non-commercial use as long as the following conditions are adhered to. The following conditions apply to all code found in this distribution, be it the RC4, RSA, lhash, DES, etc., code; not just the SSL code. The SSL documentation included with this distribution is covered by the same copyright terms except that the holder is Tim Hudson (tjh@cryptsoft.com).

Copyright remains Eric Young's, and as such any Copyright notices in the code are not to be removed.

If this package is used in a product, Eric Young should be given attribution as the author of the parts of the library used.

This can be in the form of a textual message at program startup or in documentation (online or textual) provided with the package.

Redistribution and use in source and binary forms, with or without modification, are permitted provided that the following conditions are met:

1. Redistributions of source code must retain the copyright notice, this list of conditions and the following disclaimer.
2. Redistributions in binary form must reproduce the above copyright notice, this list of conditions and the following disclaimer in the documentation and/or other materials provided with the distribution.
3. All advertising materials mentioning features or use of this software must display the following acknowledgement:
   "This product includes cryptographic software written by Eric Young (eay@cryptsoft.com)"
   The word 'cryptographic' can be left out if the routines from the library being used are not cryptographic related :-).
4. If you include any Windows specific code (or a derivative thereof) from the apps directory (application code) you must include an acknowledgement: "This product includes software written by Tim Hudson (tjh@cryptsoft.com)"

THIS SOFTWARE IS PROVIDED BY ERIC YOUNG "AS IS" AND ANY EXPRESS OR IMPLIED WARRANTIES, INCLUDING, BUT NOT LIMITED TO, THE IMPLIED WARRANTIES OF MERCHANTABILITY AND FITNESS FOR A PARTICULAR PURPOSE ARE DISCLAIMED. IN NO EVENT SHALL THE AUTHOR OR CONTRIBUTORS BE LIABLE FOR ANY DIRECT, INDIRECT, INCIDENTAL, SPECIAL, EXEMPLARY, OR CONSEQUENTIAL DAMAGES (INCLUDING, BUT NOT LIMITED TO, PROCUREMENT OF SUBSTITUTE GOODS OR SERVICES; LOSS OF USE, DATA, OR PROFITS; OR BUSINESS INTERRUPTION) HOWEVER CAUSED AND ON ANY THEORY OF LIABILITY, WHETHER IN CONTRACT, STRICT LIABILITY, OR TORT (INCLUDING NEGLIGENCE OR OTHERWISE) ARISING IN ANY WAY OUT OF THE USE OF THIS SOFTWARE, EVEN IF ADVISED OF THE POSSIBILITY OF SUCH DAMAGE.

The licence and distribution terms for any publically available version or derivative of this code cannot be changed. i.e. this code cannot simply be copied and put under another distribution licence [including the GNU Public Licence.]

Monotype Imaging License Agreement

1 *Software* shall mean the digitally encoded, machine readable, scalable outline data as encoded in a special format as well as the UFST Software.

2 You agree to accept a non-exclusive license to use the Software to reproduce and display weights, styles and versions of letters, numerals, characters and symbols (*Typefaces*) solely for your own customary business or personal purposes at the address stated on the registration card you return to Monotype Imaging. Under the terms of this License Agreement, you have the right to use the Fonts on up to three printers. If you need to have access to the fonts on more than three printers, you need to acquire a multiuser license agreement which can be obtained from Monotype Imaging. Monotype Imaging retains all rights, title and interest to the Software and Typefaces and no rights are granted to you other than a License to use the Software on the terms expressly set forth in this Agreement.

3 To protect proprietary rights of Monotype Imaging, you agree to maintain the Software and other proprietary information concerning the Typefaces in strict confidence and to establish reasonable procedures regulating access to and use of the Software and Typefaces.

4 You agree not to duplicate or copy the Software or Typefaces, except that you may make one backup copy. You agree that any such copy shall contain the same proprietary notices as those appearing on the original.

5 This License shall continue until the last use of the Software and Typefaces, unless sooner terminated. This License may be terminated by Monotype Imaging if you fail to comply with the terms of this License and such failure is not remedied within thirty (30) days after notice from Monotype Imaging. When this License expires or is terminated, you shall either return to Monotype Imaging or destroy all copies of the Software and Typefaces and documentation as requested.

6 You agree that you will not modify, alter, disassemble, decrypt, reverse engineer or decompile the Software.

7 Monotype Imaging warrants that for ninety (90) days after delivery, the Software will perform in accordance with Monotype Imaging-published specifications, and the diskette will be free from defects in material and workmanship. Monotype Imaging does not warrant that the Software is free from all bugs, errors and omissions.

   The parties agree that all other warranties, expressed or implied, including warranties of fitness for a particular purpose and merchantability, are excluded.

8 Your exclusive remedy and the sole liability of Monotype Imaging in connection with the Software and Typefaces is repair or replacement of defective parts, upon their return to Monotype Imaging.

   In no event will Monotype Imaging be liable for lost profits, lost data, or any other incidental or consequential damages, or any damages caused by abuse or misapplication of the Software and Typefaces.

9 Massachusetts U.S.A. law governs this Agreement.

10 You shall not sublicense, sell, lease, or otherwise transfer the Software and/or Typefaces without the prior written consent of Monotype Imaging.

11 Use, duplication or disclosure by the Government is subject to restrictions as set forth in the Rights in Technical Data and Computer Software clause at FAR 252-227-7013, subdivision (b)(3)(ii) or subparagraph (c)(1)(ii), as appropriate. Further use, duplication or disclosure is subject to restrictions applicable to restricted rights software as set forth in FAR 52.227-19 (c)(2).

12 You acknowledge that you have read this Agreement, understand it, and agree to be bound by its terms and conditions. Neither party shall be bound by any statement or representation not contained in this Agreement. No change in this Agreement is effective unless written and signed by properly authorized representatives of each party. By opening this diskette package, you agree to accept the terms and conditions of this Agreement.

Energy Saving Control Function

The device comes equipped with a Sleep where printer functions remain in a waiting state but power consumption is reduced to a minimum after a certain amount of time elapses since the device was last used. If the machine is not used while in sleep mode, the power automatically turns off.

Auto Sleep (page 2-23)
Power off timer (models for Europe) (page 4-17)

Automatic 2-Sided Print Function

This device includes 2-sided printing as a standard function. For example, by printing two 1-sided originals onto a single sheet of paper as a 2-sided print, it is possible to lower the amount of paper used.

Printing in duplex mode reduces paper consumption and contributes to the conservation of forest resources. Duplex mode also reduces the amount of paper that must be purchased, and thereby reduces cost. It is recommended that machines capable of duplex printing be set to use duplex mode by default.

Resource Saving - Paper

For the preservation and sustainable use of forest resources, it is recommended that recycled as well as virgin paper certified under environmental stewardship initiatives or carrying recognised ecolabels, which meet EN 12281:2002* or an equivalent quality standard, be used.

This machine also supports printing on 64 g/m^2 paper. Using such paper containing less raw materials can lead to further saving of forest resources.

* : EN12281:2002 "Printing and business paper - Requirements for copy paper for dry toner imaging processes"

Your sales or service representative can provide information about recommended paper types.

Environmental benefits of "Power Management"

To reduce power consumption when idle, this machine is equipped with a power management function that automatically activates energy-saving mode when the machine is idle for a certain period of time.
Although it takes the machine a slight amount of time to return to READY mode when in energy-saving mode, a significant reduction in energy consumption is possible. It is recommended that the machine be used with the activation time for energy-saving mode set to the default setting.

Energy Star (ENERGY STAR®) Program

We have determined as a participating company in the International Energy Star Program that this product is compliant with the standards laid out in the International Energy Star Program.

ENERGY STAR® is a voluntary energy efficiency program with the goal of developing and promoting the use of products with high energy efficiency in order to help prevent global warming. By purchasing ENERGY STAR® qualified products, customers can help reduce emissions of greenhouse gases during product use and cut energy-related costs.

2 Installing and Setting up the Machine

This chapter provides information for the administrator of this machine, such as part names, cable connection, and software installation.

Part Names (Machine Exterior) 2-2
Part Names (Connectors/Interior) 2-3
Part Names (With Optional Equipments Attached) 2-5
Connecting the Machine and Other Devices 2-6
Connecting Cables 2-7
- Connecting LAN Cable 2-7
- Connecting USB Cable 2-8
- Connecting the Power Cable 2-8

Power On/Off 2-9
- Power On 2-9
- Power Off 2-9

Using the Operation Panel 2-10
- Operation Panel 2-10
- Indicator States 2-11
- Basic Functions of Each Key 2-12

Network Setup 2-13
- Configuring the Wired Network 2-13
- Configuring the Wireless Network 2-15
- Setting Wi-Fi Direct 2-20

Energy Saver function 2-23
- Auto Sleep 2-23
- Power Off Rule (models for Europe) 2-23

Quiet Mode 2-24
Installing Software 2-25
- Software on DVD (Windows) 2-25
- Installing Software in Windows 2-26
- Uninstalling the Software 2-32
- Installing Software in Mac Computer 2-33

Command Center RX 2-35
- Accessing Command Center RX 2-36
- Changing Security Settings 2-37
- Changing Device Information 2-39
- E-mail Settings 2-41

Part Names (Machine Exterior)

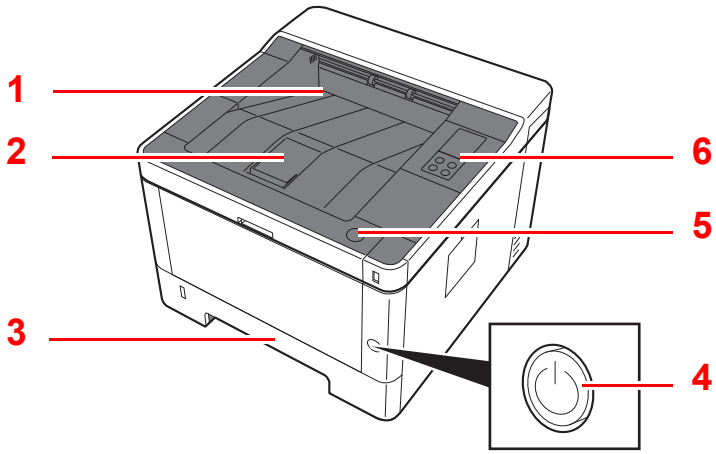

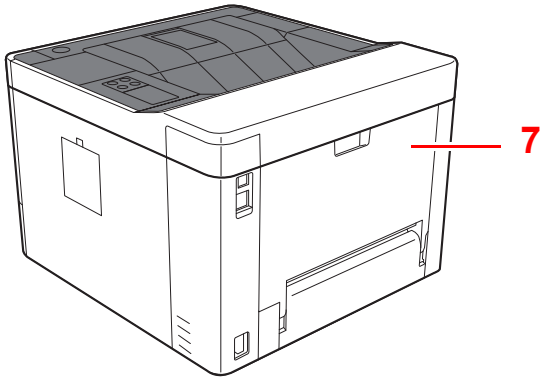

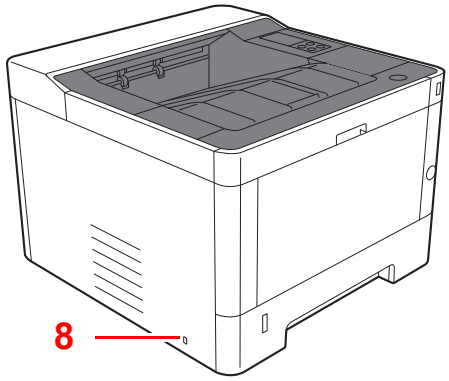

1 Top Tray
2 Paper Stopper
3 Cassette 1
4 Power Switch
5 Front Cover Open Button
6 Operation Panel
7 Rear Cover
8 Anti-theft Lock Slot

Part Names (Connectors/Interior)

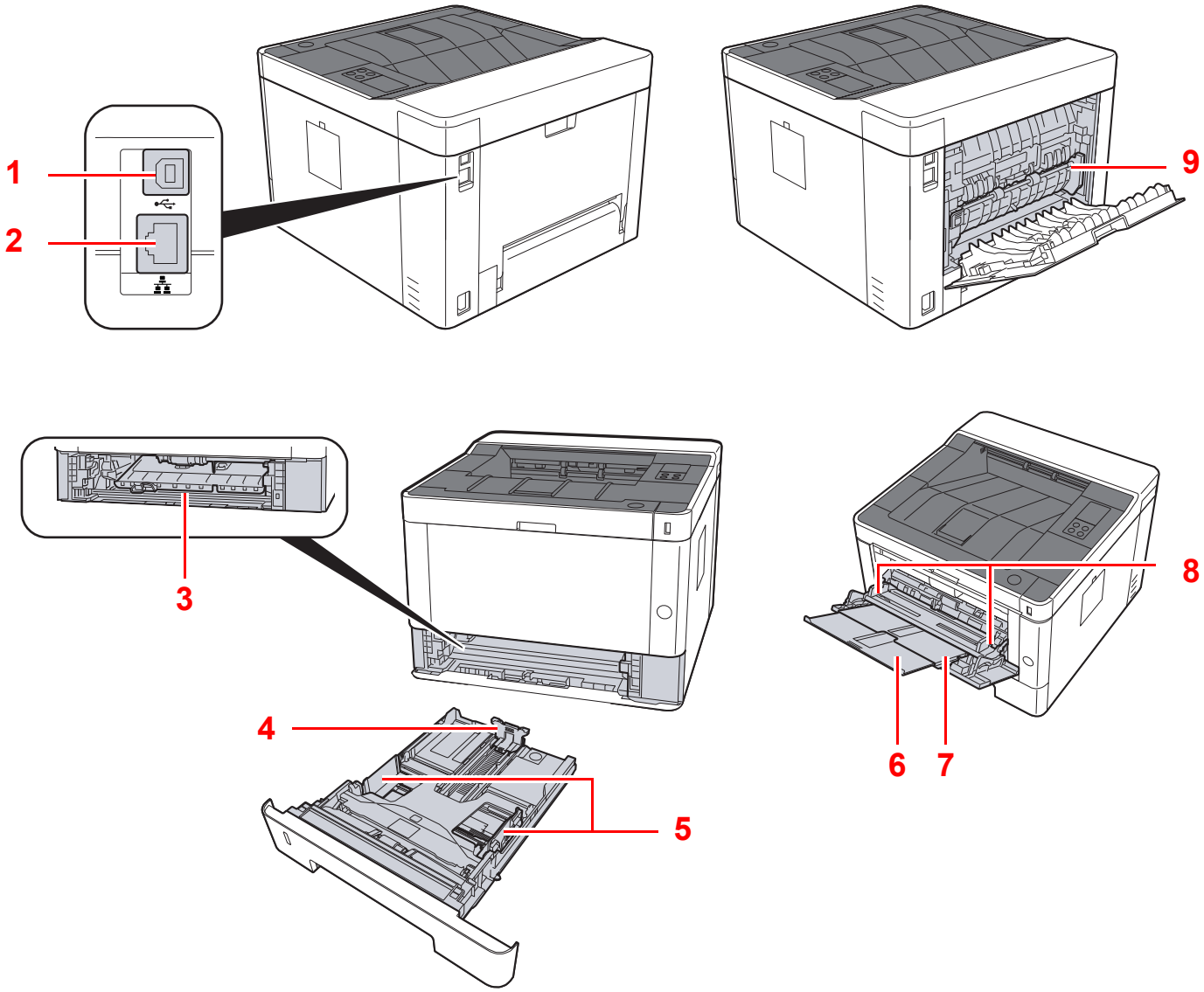

1 USB Interface Connector
2 Network Interface Connector
3 Feed Cover
4 Paper Length Guide
5 Paper Width Guides
6 Tray Extension
7 Multipurpose Tray
8 Paper Width Guides
9 Fuser Cover

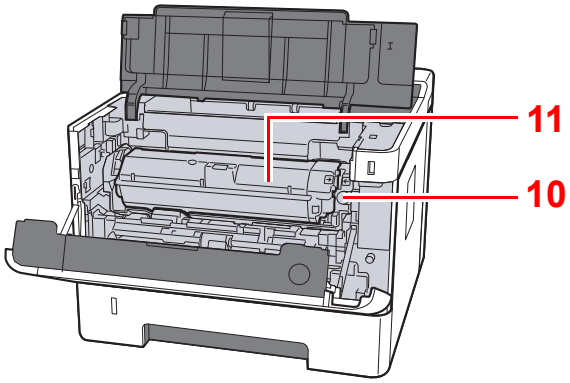

10 Toner Container Release Button

11 Toner Container

Part Names (With Optional Equipments Attached)

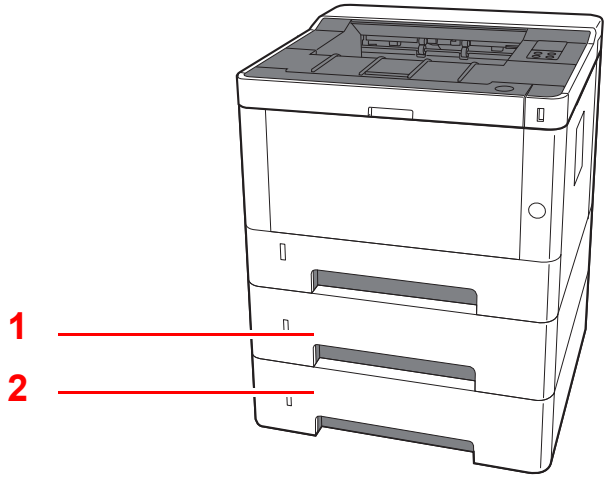

1 Cassette 2

2 Cassette 3

Optional Equipment (page 7-2)

Connecting the Machine and Other Devices

Prepare the cables necessary to suit the environment and purpose of the machine use.

When Connecting the Machine to the PC via USB

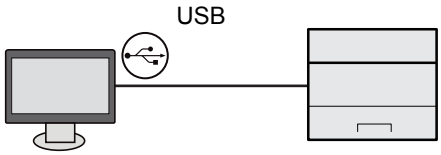

When Connecting the Machine to the PC or Tablet by network cable, Wi-Fi, or Wi-Fi direct

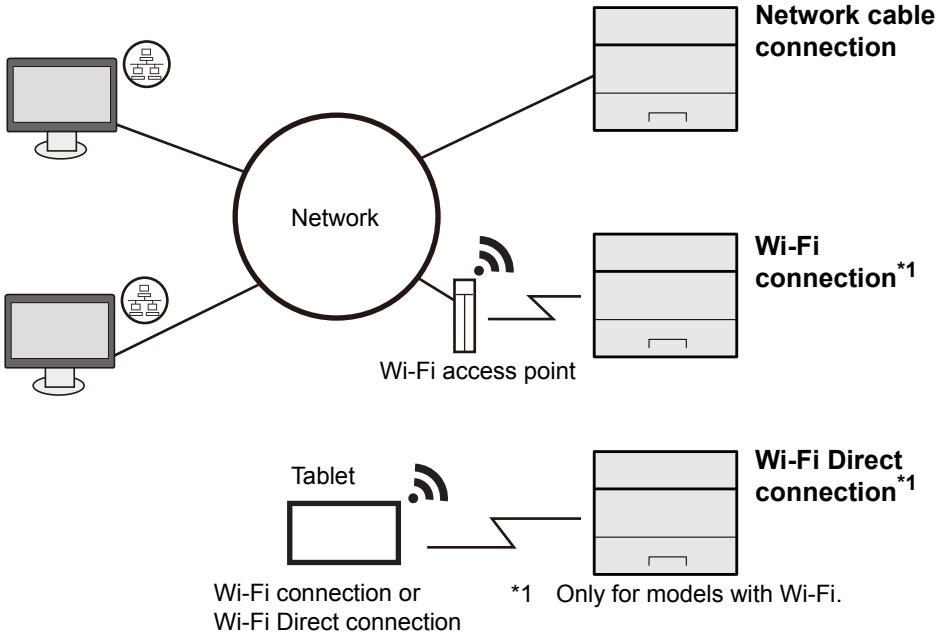

NOTE

If you are using wireless LAN, refer to the following.

Configuring the Wireless Network (page 2-15)

Cables that Can Be Used

Connection Environment	Function	Necessary Cable
Connect a LAN cable to the machine.	Printer	LAN cable (10BASE-T, 100BASE-TX, 1000BASE-T)
Connect a USB cable to the machine.	Printer	USB 2.0 compatible cable (Hi-Speed USB compliant, max. 5.0 m, shielded)

IMPORTANT

Using a cable other than a USB 2.0 compatible cable may cause failure.

Connecting Cables

Connecting LAN Cable

IMPORTANT

Make sure that the power to the machine is turned off.

Power Off (page 2-9)

1 Connect the cable to the machine.

1 Connect the LAN cable to the network interface connector.

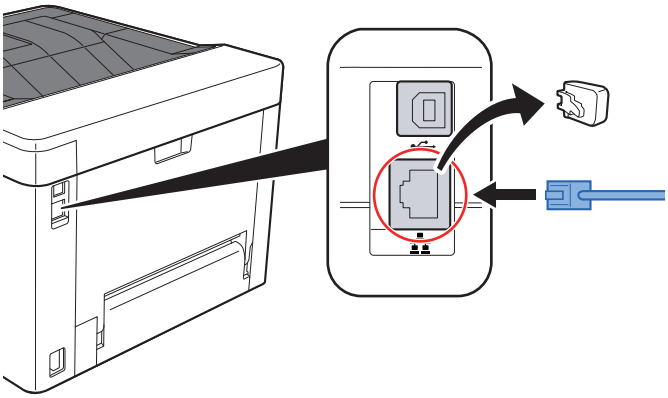

2 Connect the other end of the cable to the hub or the PC.

2 Power on the machine and configure the network.

Connecting LAN Cable (page 2-7)

Connecting USB Cable

IMPORTANT

Make sure that the power to the machine is turned off.

Power Off (page 2-9)

1 Connect the cable to the machine.

1 Connect the USB cable to the USB interface connector.

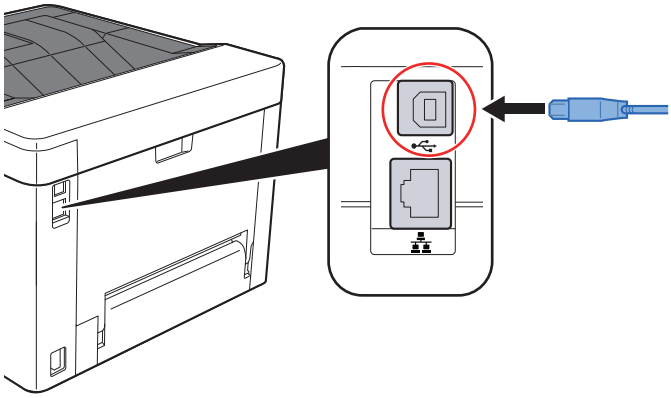

2 Connect the other end of the cable to the PC.

2 Power on the machine.

Connecting the Power Cable

1 Connect the cable to the machine.

Connect one end of the supplied power cable to the machine and the other end to a power outlet.

IMPORTANT

Only use the power cable that comes with the machine.

Power On/Off

Power On

1 **Turn the power switch on.**

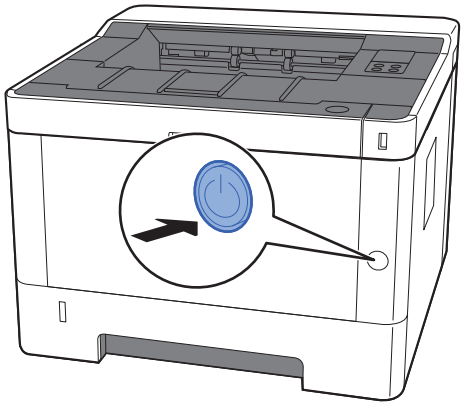

Power Off

1 **Turn the power switch off.**

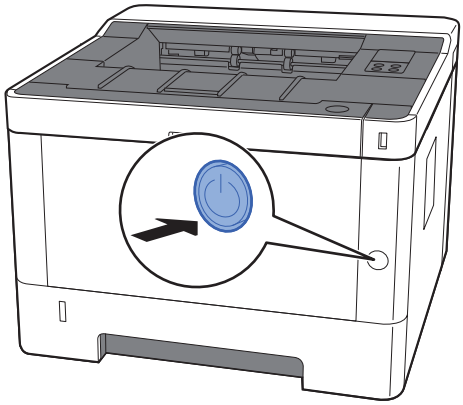

It takes about 3 minutes for power off.

CAUTION

If this machine will be left unused for an extended period (e.g. overnight), turn it off at the power switch. If the machine will not be used for an even longer period of time (e.g. vacation), remove the power plug from the outlet as a safety precaution.

IMPORTANT

Remove paper from the cassettes and seal it in the paper storage bag to protect it from humidity.

Using the Operation Panel

Operation Panel

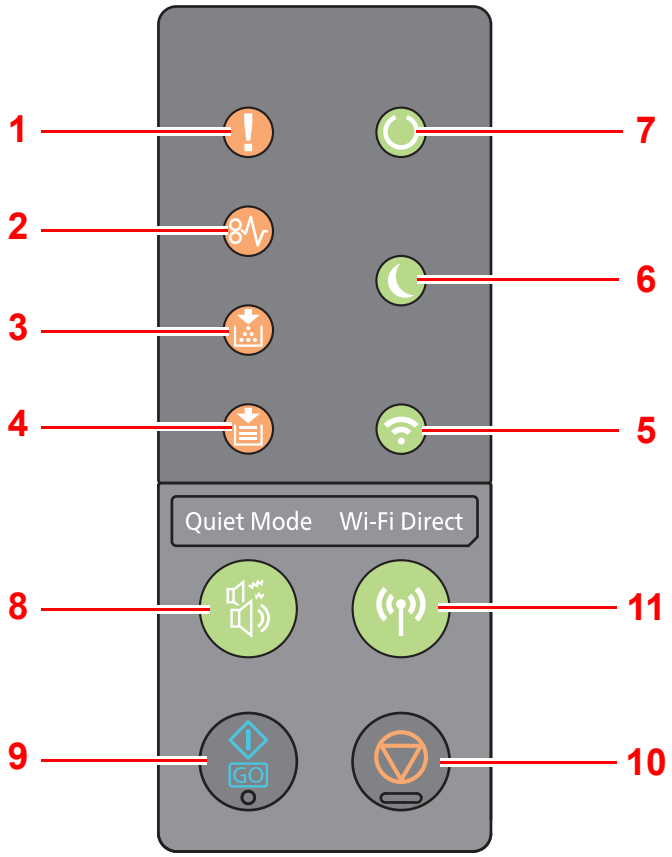

1 [**Attention**] indicator
2 [**JAM**] indicator
3 [**Toner**] indicator
4 [**Paper**] indicator
5 [**Wi-Fi**] indicator*1
6 [**Energy Saver**] indicator
7 [**Processing**] indicator
8 [**Quiet Mode**] key
9 [**GO**] key
10 [**Cancel**] key
11 [**Wi-Fi Direct**] key*1

*1 Only for models with Wi-Fi.

NOTE

For the meanings of the indicators and functions of the keys, refer to the following:

Indicator States (page 2-11)
Basic Functions of Each Key (page 2-12)

Indicator States

The indicators are used to identify the status of the printer at any time. To identify the printer status, check the indicators on the printer and then refer to the table below to check the status of the machine.

No.	Name	Indicator	Status	Meaning	Reference page
1	Attention		Lit/Flashing	An error has occurred.	page 6-16
2	JAM		Lit	A paper jam has occurred.	page 6-16 page 6-28
3	Toner		Lit	Toner is empty.	page 6-6 page 6-17
			Flashing	The toner is running low.	page 6-6 page 6-18
4	Paper		Lit	The paper has run out when printing.	page 3-4 page 6-24
			Flashing	The specified cassette or paper feeder has no paper at Ready status.	page 3-4 page 6-19
5	Wi-Fi*1		Lit	The machine is connected to Wi-Fi.	—
6	Energy Saver		Lit	The printer is in sleep mode.	page 2-23
7	Processing		Lit	Indicates online status (printing is possible).	—
			Flashing	The printer is receiving data.	—

*1 Only for models with Wi-Fi.

NOTE

If an indicator lights irregularly or blinks repeatedly, contact your service representative.

Basic Functions of Each Key

Refer to the following table for description of the basic functions of each key.

No.	Name	Key	Meaning	Reference page
8	Quiet Mode		Lower print speed for quiet processing.	page 2-24
9	GO		Clears a specific error, and wakes the machine from the sleep state.	page 2-23 page 6-20 page 6-21 page 6-23 page 6-25
10	Cancel		Pauses a job.	page 5-5
			Press for 1 second to cancel a job.	page 5-5
11	Wi-Fi Direct*1		Turns Wi-Fi Direct ON or OFF.	page 2-20

*1 Only for models with Wi-Fi.

Network Setup

Configuring the Wired Network

The machine is equipped with network interface, which is compatible with network protocols such as TCP/IP (IPv4), TCP/IP (IPv6), NetBEUI, and IPSec. It enables network printing on the Windows, Macintosh, UNIX and other platforms.

Set up TCP/IP (IPv4) to connect to the Windows network.

Be sure to connect the network cable before configuring the settings.

➔ Connecting LAN Cable (page 2-7)

For other network settings, refer to the following:

➔ **Command Center RX User Guide**

IPv4 setting

1 **Display the screen.**

1 Launch your Web browser.

2 In the address or location bar, enter the machine's IP address or the host name.

You can check the IP address or host name of the machine on the status page. To print the status page, press the [**GO**] key on the operation panel for 3 to 9 seconds.

3 Log in with administrator privileges.

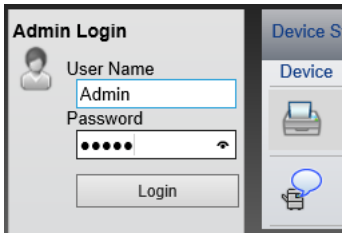

The factory default setting for the default user with administrator privileges is shown below. (Upper case and lower case letters are distinguished (case sensitive).)

Login User Name: Admin
Login Password: Admin

4 From the [**Network Settings**] menu, click [**TCP/IP**].

2 Configure the settings.

1. In "TCP/IP" - "IPv4 Settings (Wired Network)", set [**DHCP/BOOTP**] and [**Auto-IP**] to [**Off**].
2. Configure the [**IP Address**] and [**Subnet Mask**].
3. If needed, configure the [**Default Gateway**], [**DNS Server**], [**WINS Server**], and [**Host Name**] in "IPv4 Settings (Common)".
4. Click [**Submit**].

IMPORTANT

After changing settings, you must restart the network interface card. Turn the machine OFF and then ON.

You can also restart the network by selecting [Reset] in the [Management Settings] menu of the Command Center RX, and then clicking the [Restart Network] in "Restart".

NOTE

Ask your network administrator for the IP address in advance, and have it ready when you configure this setting.
In the following cases, set the IP address of DNS server on the Command Center RX.

- When using the host name with "DHCP" setting set to "Off"
- When using the DNS server with IP address that is not assigned by DHCP automatically.

Setting the IP Address of the DNS Server, refer to the following:

Command Center RX User Guide

To return the network settings to the factory settings, simultaneously press the [**Cancel**] key and [**Quiet Mode**] key for at least 15 seconds, and then turn the power OFF and ON.

Configuring the Wireless Network

When the wireless network function is available on the machine and the connection settings are configured, it is possible to print in a wireless network (wireless LAN) environment. The configuration methods are as follows:

Configuration Method	Description	Reference Page
Configuring the connection by using WPS push button on the operation panel[*1]	When your access point supports WPS push button, you can configure the connection directly by pressing WPS push button on both side.	Configuring the Connection by Using WPS Push Button on the Operation Panel (page 2-15)
Setting the connection by using the Wi-Fi Setup Tool[*2]	This is the tool included in the Product Library. You can configure the connection according to the instructions provided by the wizard.	Setting the Connection by Using the Wi-Fi Setup Tool (page 2-17)
Configuring connections on the Web Page[*2]	The connection can be set from the Command Center RX.	Configuring Connections on the Web Page (page 2-18)

*1 Configure the settings on the operation panel if your access point supports WPS.
➔ **Command Center RX User Guide**

*2 Before configuring the wireless network by using computer, connect the machine directly by using LAN cable or the wireless connection by using Wi-Fi Direct.
➔ Preparation before configuring the Wireless Network by Using Computer (page 2-16)

NOTE
On a model with a Wi-Fi function, change the settings in "Primary Network (Client)" appropriately if you switch to other than a wired network interface.

➔ **Command Center RX User Guide**

Configuring the Connection by Using WPS Push Button on the Operation Panel

When your access point supports WPS push button, you can configure the connection directly by pressing WPS push button on both side.

1 Enable Wi-Fi mode.

Simultaneously press the [**Go**] key and [**Wi-Fi Direct**] key on the operation panel for 10 seconds or more.

NOTE
You can also enable Wi-Fi from Command Center RX.

➔ Configuring Connections on the Web Page (page 2-18)

2 Turn the machine OFF and then ON.

➔ Power On/Off (page 2-9)

3 Press the WPS push button on the access point.

4 Press the [Wi-Fi Direct] key on the operation panel for 5 seconds.

NOTE
This operation means pressing a WPS push button.

The network between this machine and the access point configured.

Preparation before configuring the Wireless Network by Using Computer

Before configuring the wireless network by using computer, connect the machine with the following methods.

Wired Connection directly by Using LAN Cable

1 Connect the machine with a computer via LAN cable when the machine is powered on.

2 Turn on the computer.

The Auto-IP (Link-local) address will be assigned to the machine and the computer. This machine applies Auto-IP as the default settings.

3 Prints the status page.

Press the [**Go**] key for 3 to 9 seconds.

4 Note the IP address.

Wireless LAN Connection by Using Wi-Fi Direct

1 Enable Wi-Fi Direct mode.

Simultaneously press the [**Go**] key and [**Wi-Fi Direct**] key on the operation panel for 3 seconds.

> **NOTE**
> You can also enable Wi-Fi Direct from Command Center RX.
> **Command Center RX User Guide**

2 Turn the machine OFF and then ON.

Power On/Off (page 2-9)

3 Connect a computer or a handheld device with the machine.

Setting Wi-Fi Direct (page 2-20)

4 Prints the network status page.

Press the [**Go**] key for 10 seconds or more.

5 Note the network name (SSID), IP address, and password.

This is printed in Wi-Fi Direct on the Network Status Page.

> **NOTE**
> You can also check the network name (SSID), IP address, and password from Command Center RX.
> **Command Center RX User Guide**

Setting the Connection by Using the Wi-Fi Setup Tool

To send the Wi-Fi settings configured in the Wi-Fi Setup Tool to the machine, connect the computer or handheld device with the machine locally. The connection methods are wired connection via LAN cable or wireless LAN connection (Wi-Fi Direct).

1 Connect the machine by using a LAN cable or Wi-Fi Direct.

Wired Connection directly by Using LAN Cable (page 2-16)
Wireless LAN Connection by Using Wi-Fi Direct (page 2-16)

2 Insert the DVD.

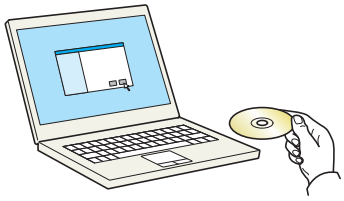

NOTE

- Installation on Windows must be done by a user logged on with administrator privileges.
- If the "Welcome to the Found New Hardware Wizard" dialog box displays, select [**Cancel**].
- If the autorun screen is displayed, click [**Run setup.exe**].
- If the user account management window appears, click [**Yes**] ([**Allow**]).

3 Display the screen.

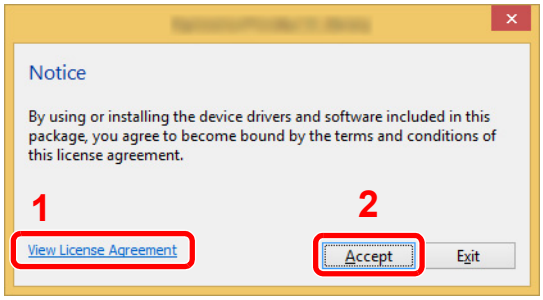

1 Click [**View License Agreement**] and read the License Agreement.

2 Click [**Accept**].

4 Select [Maintenance].

5 [Wi-Fi Setup Tool] > [OK]

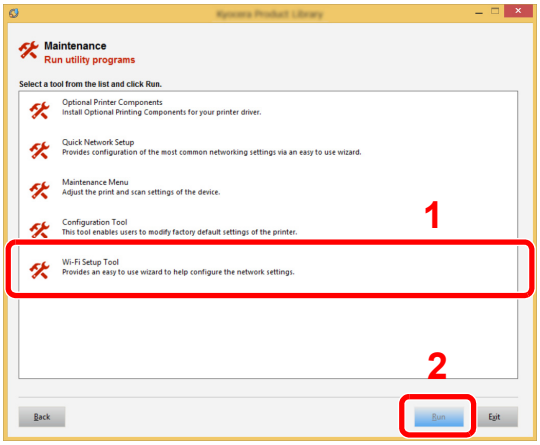

6 Configure the settings.

1 [**Do not use automatic configuration**] > [**Next**] > [**Next**]

2 [**Use LAN cable**] > [**Next**] > [**Next**]

3 [**Easy setup**] > [**Next**]

The machine is detected.

NOTE

- Only one machine can be searched using Wi-Fi Setup Tool. It may take times to search the machine.
- If the machine is not detected, select [**Advanced setup**] > [**Next**]. Select [**Express**] or [**Custom**] as device discovery method and specify the IP address or host name to search the machine.

4 Select the machine > [**Next**]

5 Select [**Use the device settings.**] on [**Authentication mode**], and enter the login user name and password. Login user name and Password are both Admin.

6 Configure the communication settings > [**Next**]

7 Change the settings of access point as necessary > [**Next**]

The network is configured.

Configuring Connections on the Web Page

The connection can be set from the Command Center RX.

1 Connect the machine by using a LAN cable or Wi-Fi Direct.

Wired Connection directly by Using LAN Cable (page 2-16)
Wireless LAN Connection by Using Wi-Fi Direct (page 2-16)

2 Display the screen.

1 Launch your Web browser.

2 In the address or location bar, enter the machine's IP address or the host name.

You can check the IP address or host name of the machine on the status page. To print the status page, press the [**GO**] key 3 to 9 seconds.

3 Log in with administrator privileges.

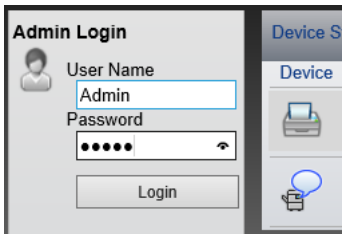

The factory default setting for the default user with administrator privileges is shown below. (Upper case and lower case letters are distinguished (case sensitive).)

Login User Name: Admin
Login Password: Admin

4 [**Network Settings**] > [**Wireless LAN**]

3 Configure the settings.

Set the item in "Wireless LAN Settings".

Command Center RX User Guide

4 Click [Submit].

5 Restart the network.

Click [**Reset**] in the [**Management Settings**] menu, and then click [**Restart Network**] in "Restart".

Setting Wi-Fi Direct

When the wireless network function is available on the machine, setting Wi-Fi Direct enables you to print from the Wi-Fi Direct environment. The configuration methods are as follows:

Configuration Method	Description	Reference Page
Using the Wi-Fi Direct mode from the handheld device[*1]	You can configure the connection using the Wi-Fi Direct mode from the computer or handheld device.	Using the Wi-Fi Direct Mode from the Handheld Device (page 2-20)
Using the Wi-Fi mode and detecting the machine from the handheld device	You can configure the connection using the Wi-Fi mode from the computer or handheld device, detect and connect the machine as an access point.	Using the Wi-Fi Mode and Detecting the Machine from the Handheld Device (page 2-21)
Using the Wi-Fi mode and WPS push button on the handheld device	You can configure the connection using the Wi-Fi mode from the computer or handheld device with WPS push button, and then connect the network by pressing WPS push button on both the machine and the computer or handheld device.	Using the Wi-Fi mode and WPS Push Button on both the Computer or Handheld Device (page 2-22)

*1 When using Wi-Fi Direct mode, if the computer or handheld device is already connected to another network using the Wi-Fi mode, you cannot execute the job because the machine is not detected from the application.

Using the Wi-Fi Direct Mode from the Handheld Device

Here, we'll explain the procedures for connecting to Android 4.4 or more handheld devices.

1 Enable Wi-Fi Direct mode.

Simultaneously press the [**Go**] key and [**Wi-Fi Direct**] key on the operation panel for 3 seconds.

NOTE

You can also enable Wi-Fi Direct from Command Center RX.

➔ **Command Center RX User Guide**

2 Turn the machine OFF and then ON.

➔ Power On/Off (page 2-9)

3 Select the host name (KMxxxxxx) on the Wi-Fi Direct menu of the handheld device.

4 Press the [Wi-Fi Direct] key on the operation panel for 1 second, when the [Wi-Fi Direct] key is blinking.

NOTE

This operation means it needs the first confirmation for the Wi-Fi Direct connection from the handheld device.

The network between this machine and the handheld device is configured.

Using the Wi-Fi Mode and Detecting the Machine from the Handheld Device

Here, we'll explain the procedures for connecting to iOS handheld devices. You can connect to Android handheld devices or computers using the similar procedure.

1 Enable Wi-Fi Direct mode.

Simultaneously press the [**Go**] key and [**Wi-Fi Direct**] key on the operation panel for 3 seconds.

NOTE

You can also enable Wi-Fi Direct from Command Center RX.

➔ **Command Center RX User Guide**

2 Turn the machine OFF and then ON.

➔ Power On/Off (page 2-9)

3 Prints the service status page.

Press the [**Go**] key for 10 seconds or more.

4 Note the network name (SSID), IP address, and password.

This is printed in Wi-Fi Direct on the Network Status Page.

NOTE

You can also check the network name (SSID), IP address, and password from Command Center RX.

➔ **Command Center RX User Guide**

5 Configure the handheld device or the computer.

For configure the handheld device

1. [**Settings**] > [**Wi-Fi**]
2. Select the network name (SSID) appeared in step 4 from the list.
3. Enter the password that was provided in step 4 > [**Connect**]

   The network between this machine and the handheld device is configured.

For configure the computer

1. Click the "Network" icon on the task tray to show a list of the networks.
2. Select the network name (SSID) appeared in step 4 from the list > [**Connect**]
3. Enter the password that was provided in step 4 > [**Next**] > [**Yes**]

   The network between this machine and the computer is configured.

Using the Wi-Fi mode and WPS Push Button on both the Computer or Handheld Device

When your computer or handheld device supports WPS push button on the Wi-Fi mode, you can configure the connection by pressing WPS push button on both the machine and the computer or handheld device side.

1 Enable Wi-Fi Direct mode.

Simultaneously press the [**Go**] key and [**Wi-Fi Direct**] key on the operation panel for 3 seconds.

NOTE

You can also enable Wi-Fi Direct from Command Center RX.

Command Center RX User Guide

2 Turn the machine OFF and then ON.

Power On/Off (page 2-9)

3 Press the [Wi-Fi Direct] key on the operation panel for 5 seconds.

NOTE

This operation means pressing a WPS push button.

4 Tap the [WPS Push Button] on the computer or handheld device.

The network between this machine and the computer or handheld device is configured.

IMPORTANT

You can connect up to three handheld devices at the same time using Wi-Fi Direct setting. When the devices that support Wi-Fi Direct are connected, if you want to connect other device, disconnect the already-connected devices from the network. The disconnection methods are as follows:

- **Disconnect the network from the computer or handheld computer**
- **Disconnecting all devices from the network on the operation panel**
  Simultaneously press the [Cancel] key and [Wi-Fi Direct] key on the operation panel for 3 seconds.
- **Configuring auto disconnecting time from the Command Center RX**
  Command Center RX User Guide

Energy Saver function

If a certain period of time elapses after the machine is last used, the machine automatically enters sleep mode, which minimizes power consumption. If the machine is not used while in sleep mode, the power automatically turns off.

Auto Sleep

Auto Sleep automatically switches the machine into Sleep if left idle for a preset time.

The amount of time before entering Sleep is as follows.

- 1 minute (default setting)

If print data is received during Sleep, the machine automatically wakes up and starts printing.

To resume, perform the following actions.

- Select the [**Go**] key.

Recovery time from Sleep Mode is as follows.

- Within 10 seconds

Note that ambient environmental conditions, such as ventilation, may cause the machine to respond more slowly.

For more information on Auto Sleep, refer to the following:

➔ Auto sleep (page 4-17)

Power Off Rule (models for Europe)

The Power Off Rule is used to stop the power from automatically turning off.

The default preset time is 3 days.

For more information on Power Off Rule settings, refer to the following:

➔ Power off timer (models for Europe) (page 4-17)

Quiet Mode

Lower print speed for quiet processing. Select this mode when the running noise is uncomfortable.
When the [**Quiet Mode**] key is selected, the [**Quiet Mode**] key blinks and Quiet Mode is enabled.

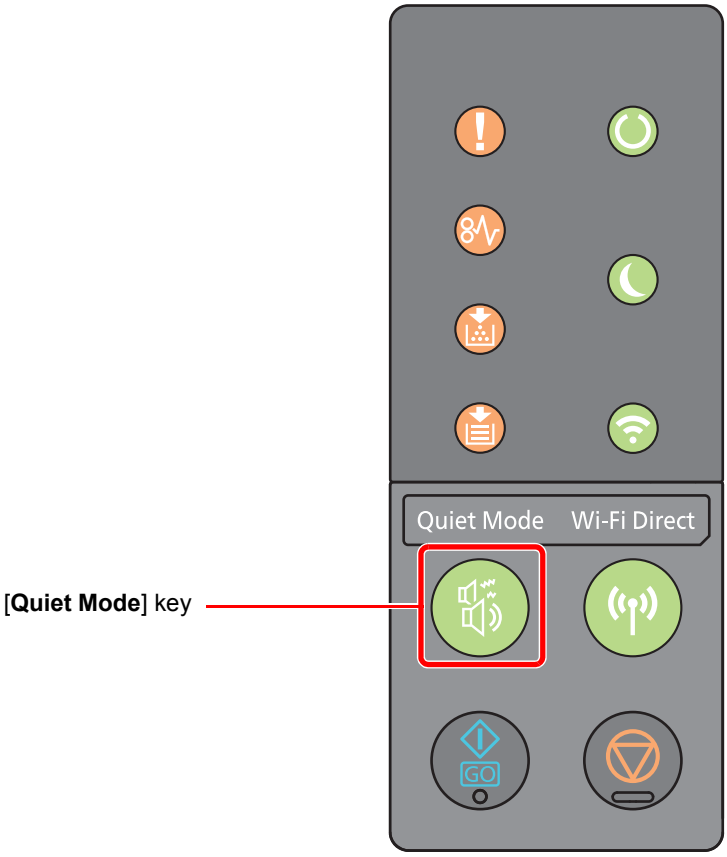

NOTE

The processing speed will be slower than normal when in Quiet Mode.

Installing Software

Install appropriate software on your PC from the included DVD (Product Library) if you want to use the printer function of this machine from your PC.

Software on DVD (Windows)

You can use either [**Express Install**] or [**Custom Install**] can be selected for the installation method. [**Express Install**] is the standard installation method. To install components that cannot be installed by [**Express Install**], use [**Custom Install**].

For details on Custom Installation, refer to the following:

Custom Install (page 2-28)

Software	Description	Express Install
KX DRIVER	This driver enables files on a computer to be printed by the machine. Multiple page description languages (PCL XL, KPDL, etc.) are supported by a single driver. This printer driver allows you to take full advantage of the features of the machine. Use this driver to create PDF files.	○
KX XPS DRIVER	This printer driver supports the XPS (XML Paper Specification) format developed by Microsoft Corporation.	-
KPDL mini-driver/PCL mini-driver	This is a Microsoft MiniDriver that supports PCL and KPDL. There are some restrictions on the machine features and option features that can be used with this driver.	-
KYOCERA Net Viewer	This is a utility that enables monitoring of the machine on the network.	-
Status Monitor	This is a utility that monitors the printer status and provides an ongoing reporting function.	○
KYOCERA Net Direct Print	This makes it possible to print a PDF file without starting Adobe Acrobat/ Reader.	-
FONTS	These are display fonts that enable the machine's built-in fonts to be used in a software application.	○

NOTE

- Installation on Windows must be done by a user logged on with administrator privileges.
- KX XPS DRIVER cannot be installed on Windows XP.

Installing Software in Windows

Express Install

The following procedure is an example for installing the software in Windows 8.1 using [**Express Install**].

For details on Custom Installation, refer to the following:

Custom Install (page 2-28)

1 Insert the DVD.

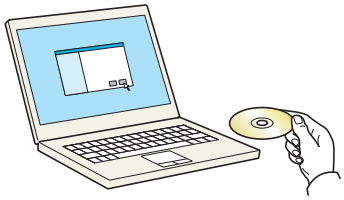

NOTE

- Installation on Windows must be done by a user logged on with administrator privileges.
- If the "**Welcome to the Found New Hardware Wizard**" dialog box displays, select [**Cancel**].
- If the autorun screen is displayed, click [**Run setup.exe**].
- If the user account management window appears, click [**Yes**] ([**Allow**]).

2 Display the screen.

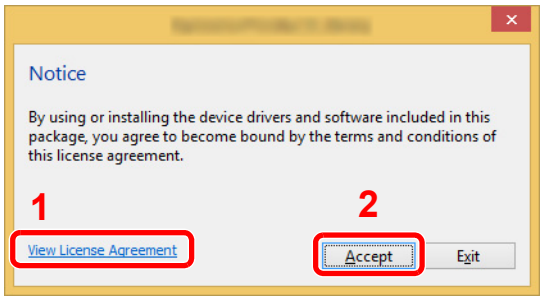

1 Click [**View License Agreement**] and read the License Agreement.

2 Click [**Accept**].

3 Select [Express Install].

4 Install the software.

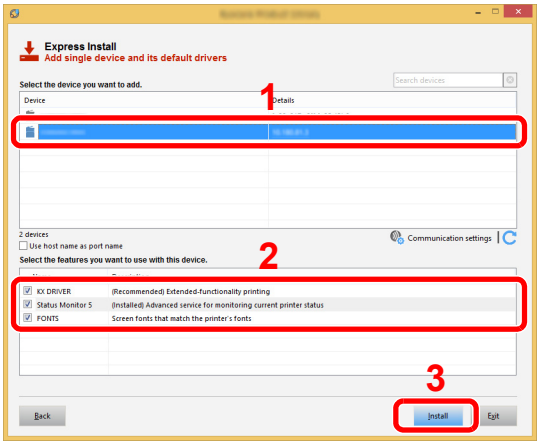

You can also select [**Use host name for port name**] and set to use the host name of the standard TCP/IP port. (A USB connection cannot be used.)

IMPORTANT

If Wi-Fi or Wi-Fi Direct is enabled, be sure to specify the IP address for the port name. Installation may fail if the host name is specified.

NOTE

- The machine cannot be detected unless it is on. If the computer fails to detect the machine, verify that it is connected to the computer via a network or USB cable and that it is turned on and click (Reload).
- If the Windows security window appears, click [**Install this driver software anyway**].
- To install Status Monitor on Windows versions preceding Windows 8, it is necessary to install Microsoft .NET Framework 4.0 beforehand.

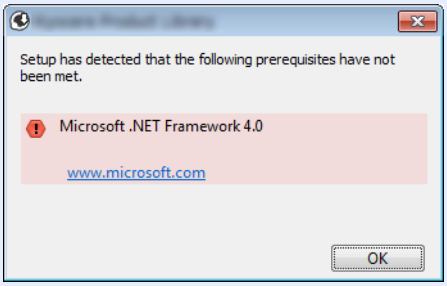

5 Finish the installation.

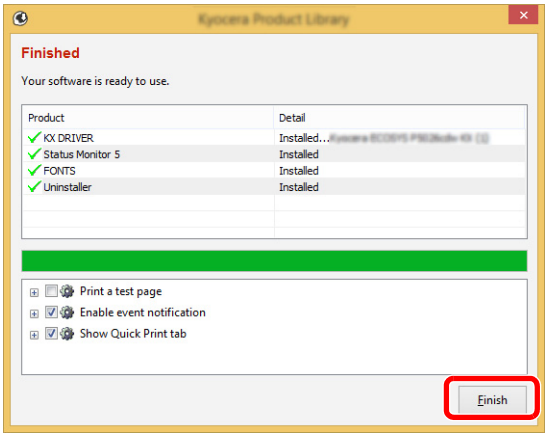

When "**Your software is ready to use**" appears, you can use the software. To print a test page, click the "**Print a test page**" checkbox and select the machine.

Click [**Finish**] to exit the wizard.

NOTE

When you have selected [**Device settings**] in Windows XP, the dialog box for device setting will appear after [**Finish**] is clicked. Configure the settings for options installed on the machine. Device settings can be configured after the installation is completed.

Printer Driver User Guide

If a system restart message appears, restart the computer by following the screen prompts. This completes the printer driver installation procedure.

Custom Install

The following procedure is an example for installing the software in Windows 8.1 using [**Custom Install**].

1 Insert the DVD.

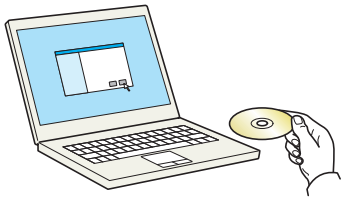

NOTE

- Installation on Windows must be done by a user logged on with administrator privileges.
- If the "**Welcome to the Found New Hardware Wizard**" dialog box displays, select [**Cancel**].
- If the autorun screen is displayed, click [**Run setup.exe**].
- If the user account management window appears, click [**Yes**] ([**Allow**]).

2 Display the screen.

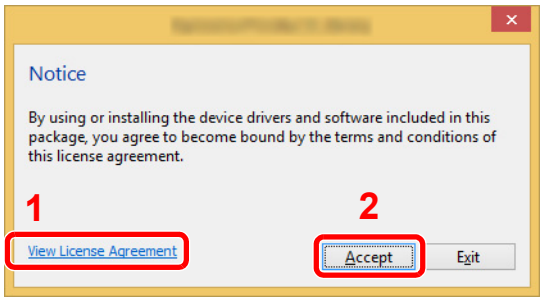

1 Click [**View License Agreement**] and read the License Agreement.

2 Click [**Accept**].

3 Select [Custom Install].

4 Install the software.

1 Select the device to be installed.

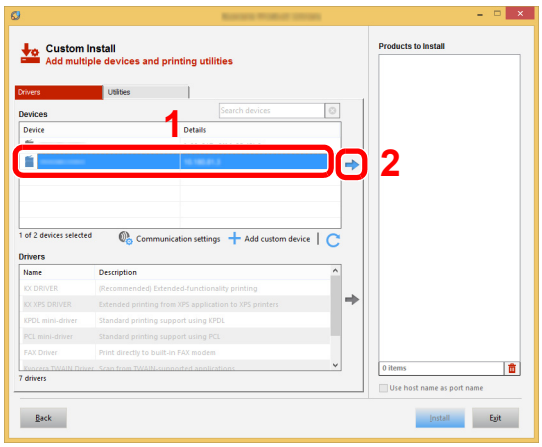

IMPORTANT

If Wi-Fi or Wi-Fi Direct is enabled, be sure to specify the IP address for the port name. Installation may fail if the host name is specified.

NOTE

- The machine cannot be detected unless it is on. If the computer fails to detect the machine, verify that it is connected to the computer via a network or USB cable and that it is turned on and click (Reload).
- If the desired device does not appear, select [**Add custom device**] to directly select the device.

2 Select the driver to be installed.

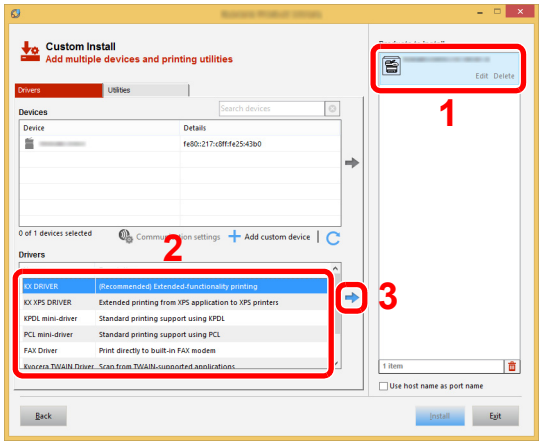

3 Click [**Utility**] tab and select the utility to be installed.

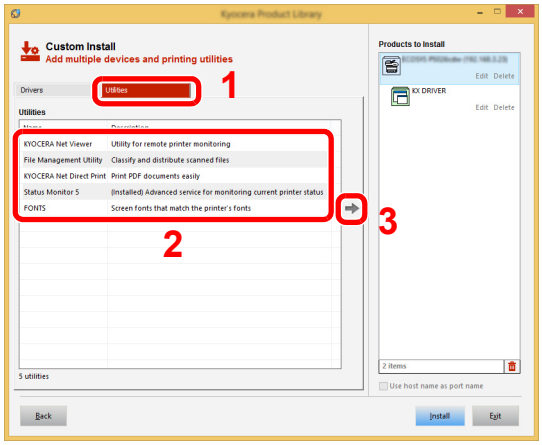

4 Click [**Install**].

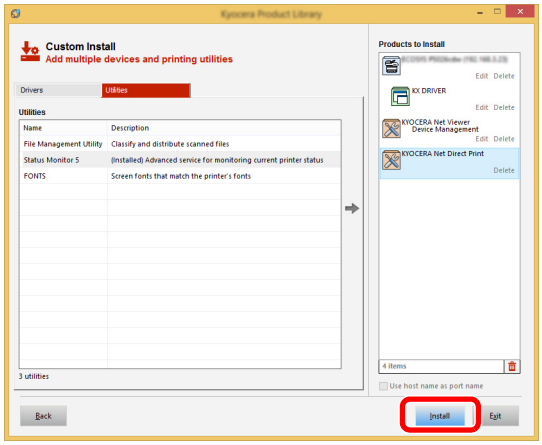

NOTE

To install Status Monitor on Windows versions preceding Windows 8, it is necessary to install Microsoft .NET Framework 4.0 beforehand.

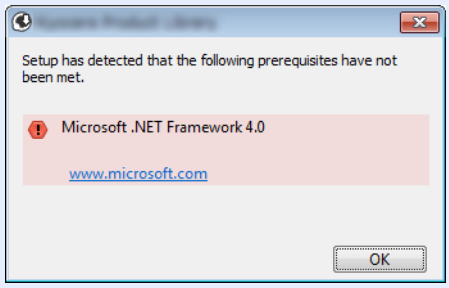

5 Finish the installation.

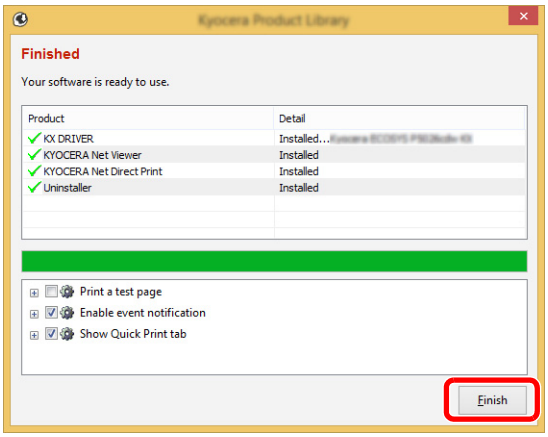

When "**Your software is ready to use**" appears, you can use the software. To print a test page, click the "**Print a test page**" checkbox and select the machine.

Click [**Finish**] to exit the wizard.

NOTE

When you have selected [**Device settings**] in Windows XP, the dialog box for device setting will appear after [**Finish**] is clicked. Configure the settings for options installed on the machine. Device settings can be configured after the installation is completed.

➔ **Printer Driver User Guide**

If a system restart message appears, restart the computer by following the screen prompts. This completes the printer driver installation procedure.

Uninstalling the Software

Perform the following procedure to delete the Software from your computer.

NOTE

Uninstallation on Windows must be done by a user logged on with administrator privileges.

1 Display the screen.

Click [**Search**] in charms, and enter "Uninstall Kyocera Product Library" in the search box. Select [**Uninstall Kyocera Product Library**] in the search list.

NOTE

In Windows 7, click [**Start**] button on the Windows and then select [**All Programs**], [**Kyocera**], and [**Uninstall Kyocera Product Library**] to display the Uninstall Wizard.

2 Uninstall the software.

Place a check in the check box of the software to be deleted.

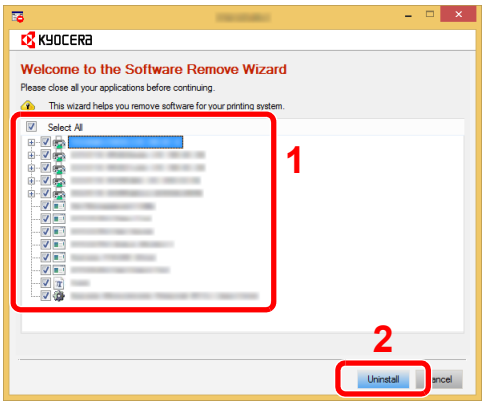

3 Finish uninstalling.

If a system restart message appears, restart the computer by following the screen prompts. This completes the software uninstallation procedure.

NOTE

- The software can also be uninstalled using the Product Library.
- In the Product Library screen, click [**Uninstall**], and follow the on-screen instructions to uninstall the software.

Installing Software in Mac Computer

The machine's printer functionality can be used by a Mac computer.

NOTE

- Installation on Mac OS must be done by a user logged on with administrator privileges.
- When printing from a Macintosh computer, set the machine's emulation to [**KPDL**] or [**KPDL(Auto)**].

Default emulation (page 4-17)

- In the Authenticate screen, enter the name and password used to log in to the operating system.

1 Insert the DVD.

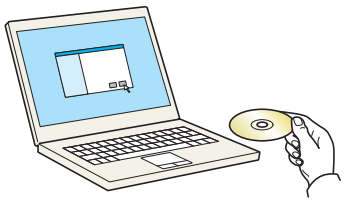

Double-click the [**Kyocera**] icon.

2 Display the screen.

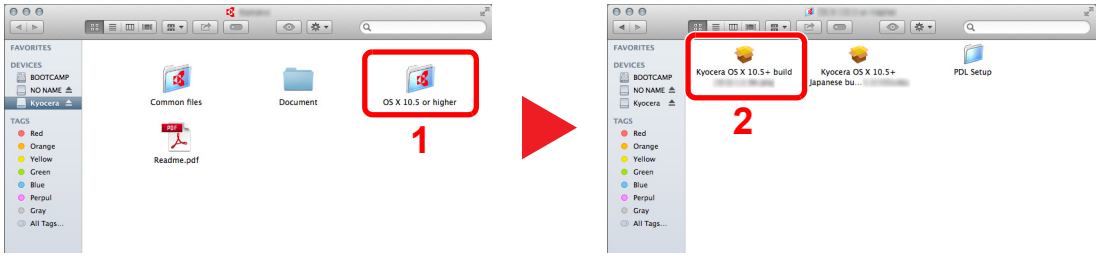

Double-click [**Kyocera OS X x.x**] depending on your Mac OS version.

3 Install the Printer Driver.

Install the printer driver as directed by the instructions in the installation software.

This completes the printer driver installation.

If a USB connection is used, the machine is automatically recognized and connected.
If an IP connection is used, the settings below are required.

4 Configure the printer.

1 Open System Preferences and add the printer.

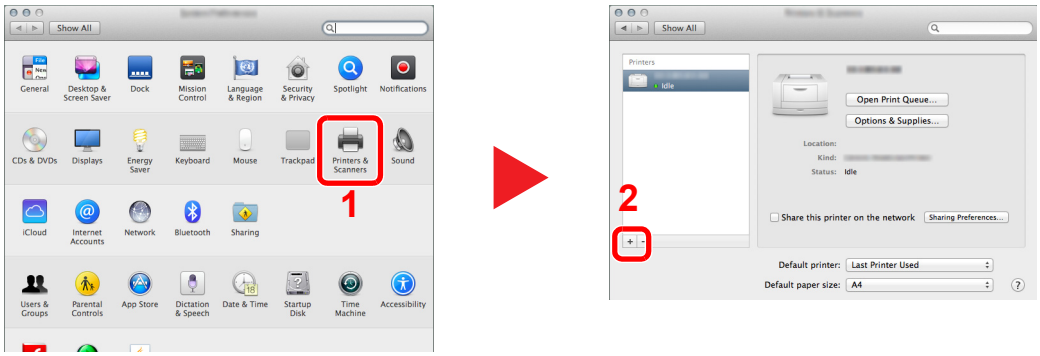

2 Select [**Default**] and then select the driver after clicking on the item that appears in "Name."

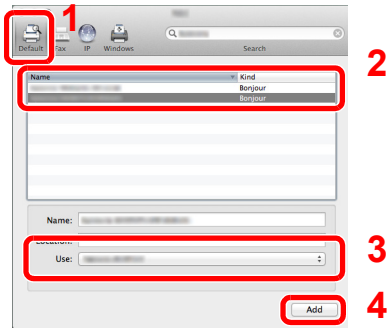

NOTE

When using an IP connection, click the IP icon for an IP connection and then enter the host name or IP address. The number entered in "Address" will automatically appear in "Name". Change if needed.

3 Select the options available for the machine.

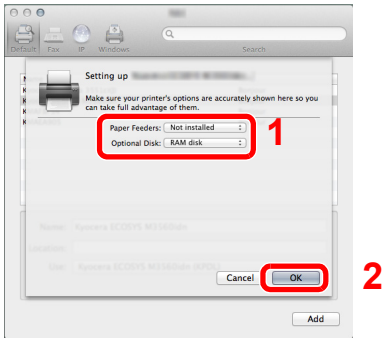

4 The selected machine is added.

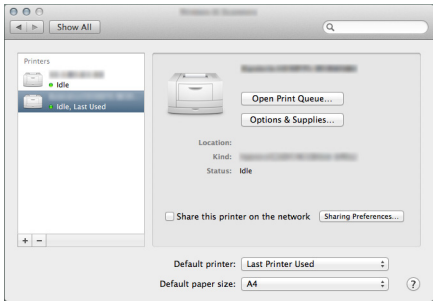

Command Center RX

If the machine is connected to the network, you can configure various settings using Command Center RX.

This section explains how to access Command Center RX, and how to change security settings and the host name.

Command Center RX User Guide

NOTE

To fully access the features of the Command Center RX pages, enter the User Name and Password and click [**Login**]. Entering the predefined administrator password allows the user to access all pages. The factory default setting for the default user with administrator privileges is shown below. (Upper case and lower case letters are distinguished (case sensitive).)

Login User Name: **Admin**
Login Password: **Admin**

Settings that the administrator and general users can configure in Command Center RX are as follows.

Setting	Description	Administ-rator	General User
Device Information	The machine's structure can be checked.	○	○
Job Status	Displays all device information, including print jobs, and job log history.	○	○
Document Box	Configures settings related to the Job Box.	○	-
Device Settings	Configure the advanced settings of the machine.	○	-
Function Settings	Configure the advanced function settings.	○	-
Network Settings	Configure the network advanced settings.	○	-
Security Settings	Configure the security advanced settings.	○	-
Management Settings	Configure the advanced management settings.	○	-

Accessing Command Center RX

1 Display the screen.

1 Launch your Web browser.

2 In the address or location bar, enter the machine's IP address or the host name.

You can check the IP address or host name of the machine on the status page. To print the status page, press the [**GO**] key on the operation panel for 3 to 9 seconds.

Examples: https://192.168.48.21/ (for IP address)
https://MFP001 (if the host name is "MFP001")

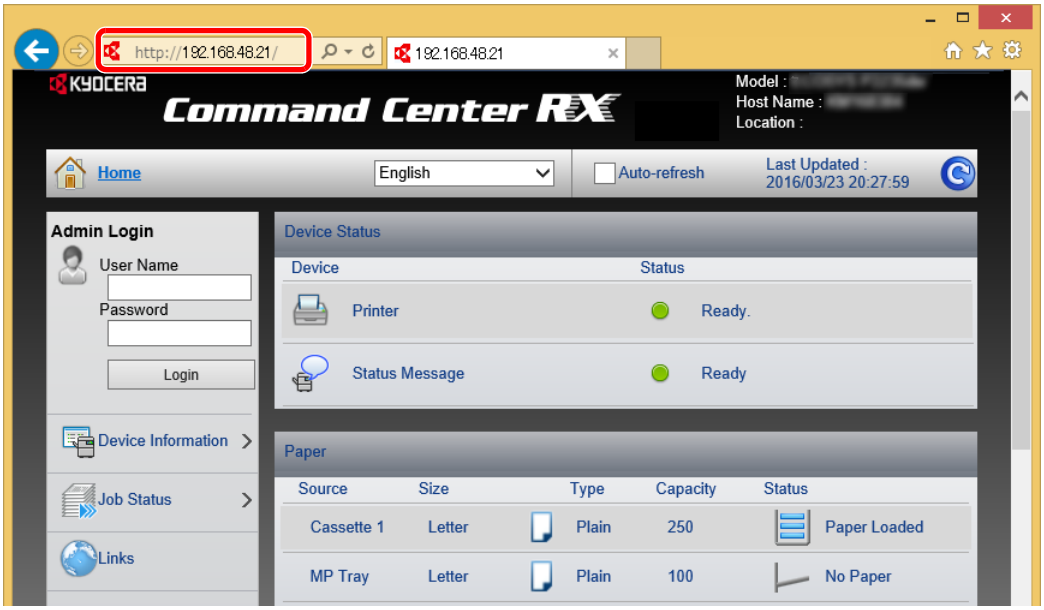

The web page displays basic information about the machine and Command Center RX as well as their current status.

NOTE

If the screen "There is a problem with this website's security certificate." is displayed, configure the certificate.

➔ **Command Center RX User Guide**

You can also continue the operation without configuring the certificate.

2 Configure the function.

Select a category from the navigation bar on the left of the screen.

NOTE

To fully access the features of the Command Center RX pages, enter the User Name and Password and click [**Login**]. Entering the predefined administrator password allows the user to access all pages, including Document Box. The factory default setting for the default user with administrator privileges is shown below. (Upper case and lower case letters are distinguished (case sensitive).)

Login User Name: Admin
Login Password: Admin

Changing Security Settings

1 Display the screen.

1 Launch your Web browser.

2 In the address or location bar, enter the machine's IP address or the host name.

You can check the IP address or host name of the machine on the status page. To print the status page, press the [**GO**] key on the operation panel for 3 to 9 seconds.

3 Log in with administrator privileges.

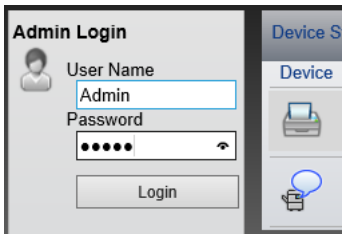

The factory default setting for the default user with administrator privileges is shown below. (Upper case and lower case letters are distinguished (case sensitive).)

Login User Name: Admin
Login Password: Admin

4 Click [**Security Settings**].

2 Configure the Security Settings.

From the [**Security Settings**] menu, select the setting you want to configure.

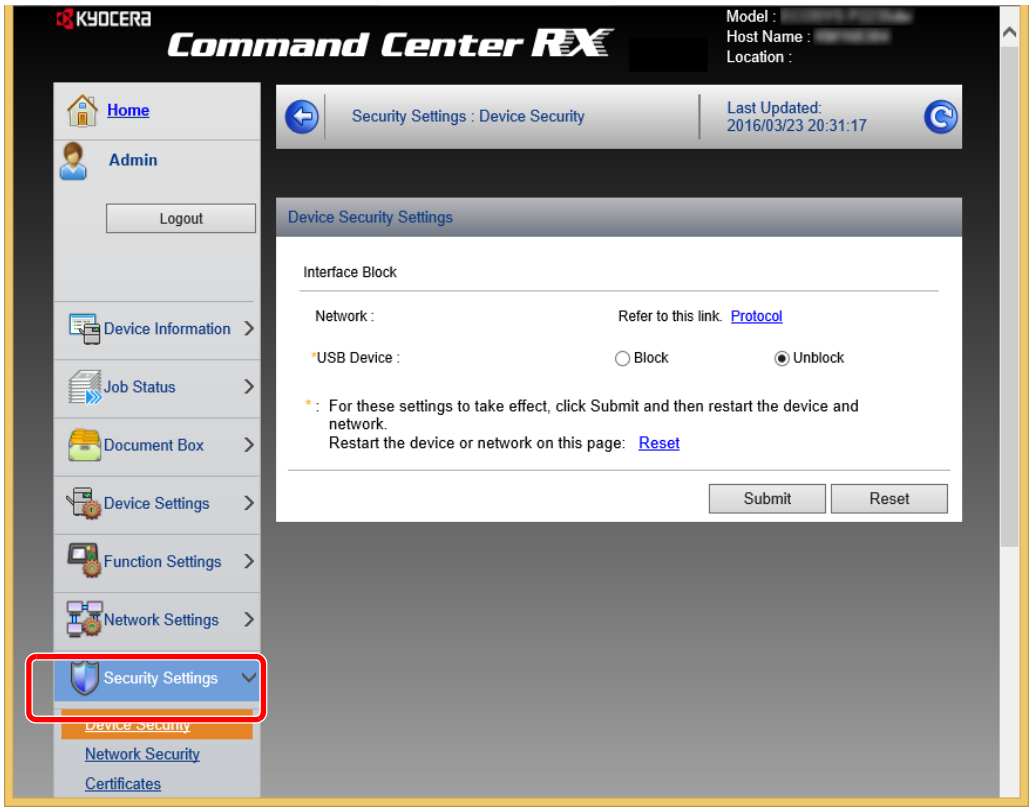

NOTE

For details on settings related to certificates, refer to the following:

➔ **Command Center RX User Guide**

Changing Device Information

1 Display the screen.

1 Launch your Web browser.

2 In the address or location bar, enter the machine's IP address or the host name.

You can check the IP address or host name of the machine on the status page. To print the status page, press the [**GO**] key on the operation panel for 3 to 9 seconds.

3 Log in with administrator privileges.

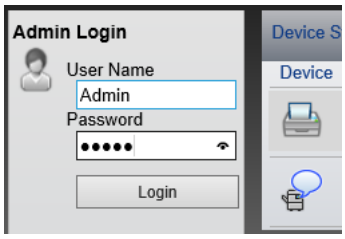

The factory default setting for the default user with administrator privileges is shown below. (Upper case and lower case letters are distinguished (case sensitive).)

Login User Name: Admin
Login Password: Admin

4 From the [**Device Settings**] menu, click [**System**].

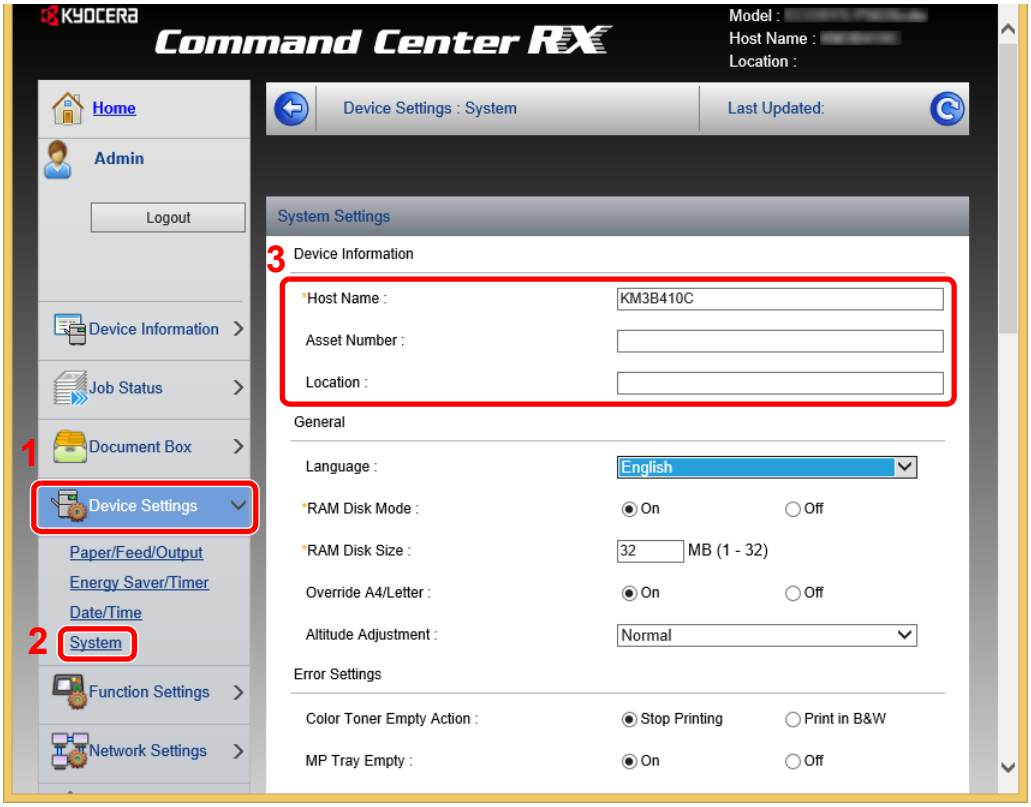

2 Specify the host name.

Enter the device information, and then click [**Submit**].

IMPORTANT

After changing the setting, restart the network or turn the machine OFF and then ON.

To restart the network, click [Reset] in the [Management Settings] menu, and then click [Restart Network] in "Restart".

E-mail Settings

By configuring the SMTP settings, it is possible to send E-mail notices when jobs have been completed.

To use this function, this machine must be connected to a mail server using the SMTP protocol.

In addition, configure the following.

- SMTP settings
  Item: "SMTP Protocol" and "SMTP Server Name" in "SMTP"
- The sender address when the machine sends E-mails
  Item: "Sender Address" in "E-mail Send Settings"
- The setting to limit the size of E-mails
  Item: "E-mail Size Limit" in "E-mail Send Settings"

The procedure for specifying the SMTP settings is explained below.

1 Display the screen.

Display the SMTP Protocol screen.

1. Launch your Web browser.
2. In the address or location bar, enter the machine's IP address or the host name.

   You can check the IP address or host name of the machine on the status page. To print the status page, press the [**GO**] key on the operation panel for 3 to 9 seconds.
3. Log in with administrator privileges.

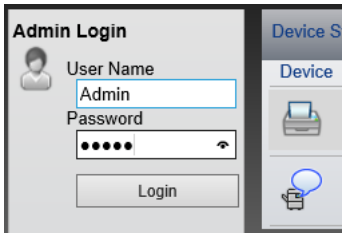

The factory default setting for the default user with administrator privileges is shown below. (Upper case and lower case letters are distinguished (case sensitive).)

Login User Name: Admin
Login Password: Admin

4 From the [**Network Settings**] menu, click [**Protocol**].

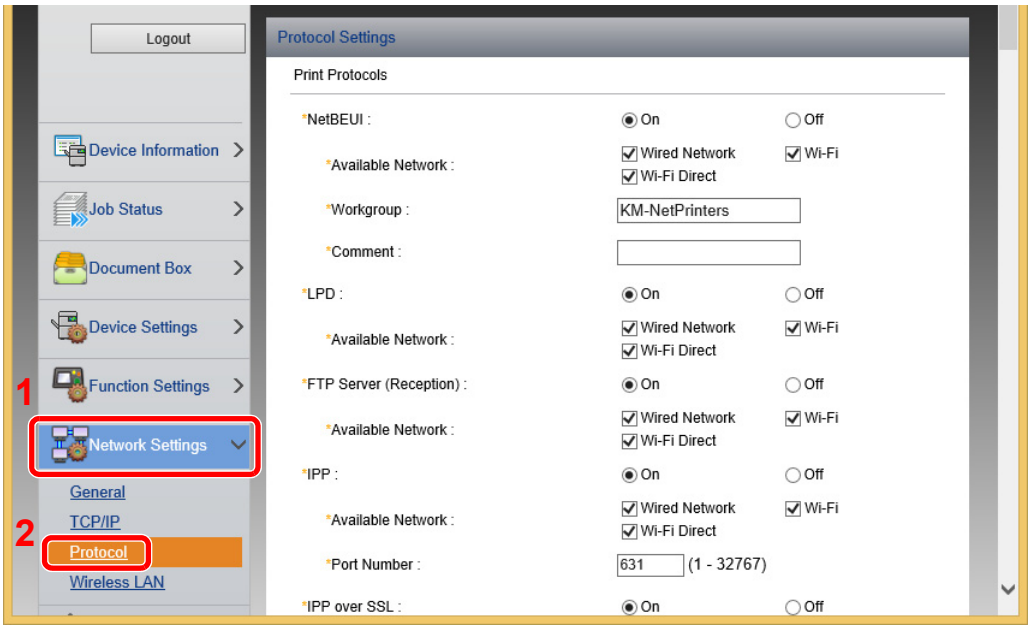

2 Configure the settings.

Set "SMTP (E-mail TX)" to [**On**] in the "Send Protocols".

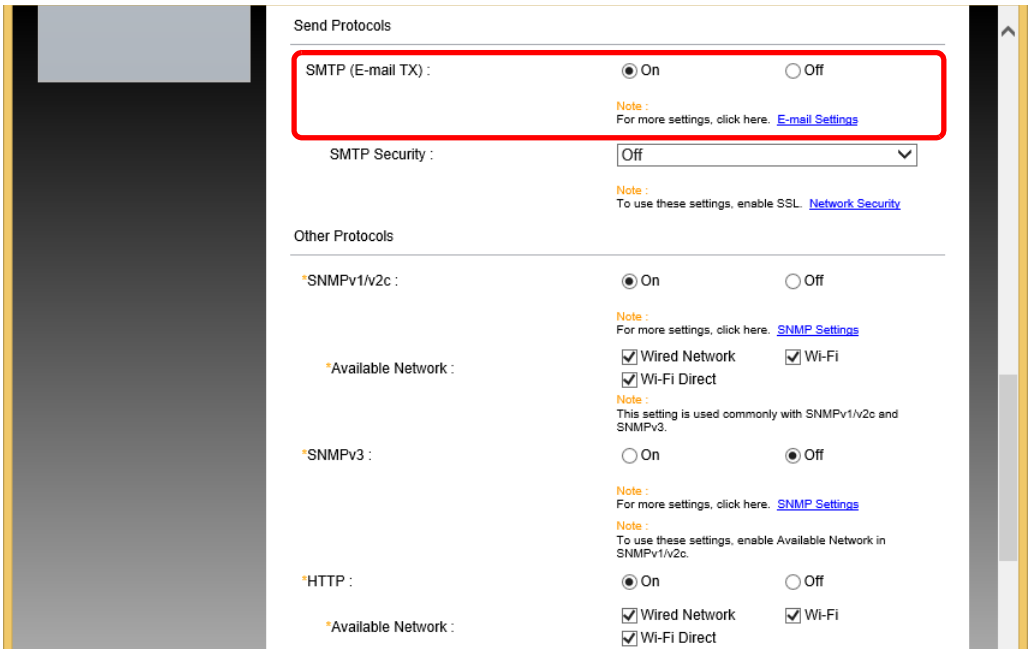

3 Display the screen.

Display the E-mail Settings screen.

From the [**Function Settings**] menu, click [**E-mail**].

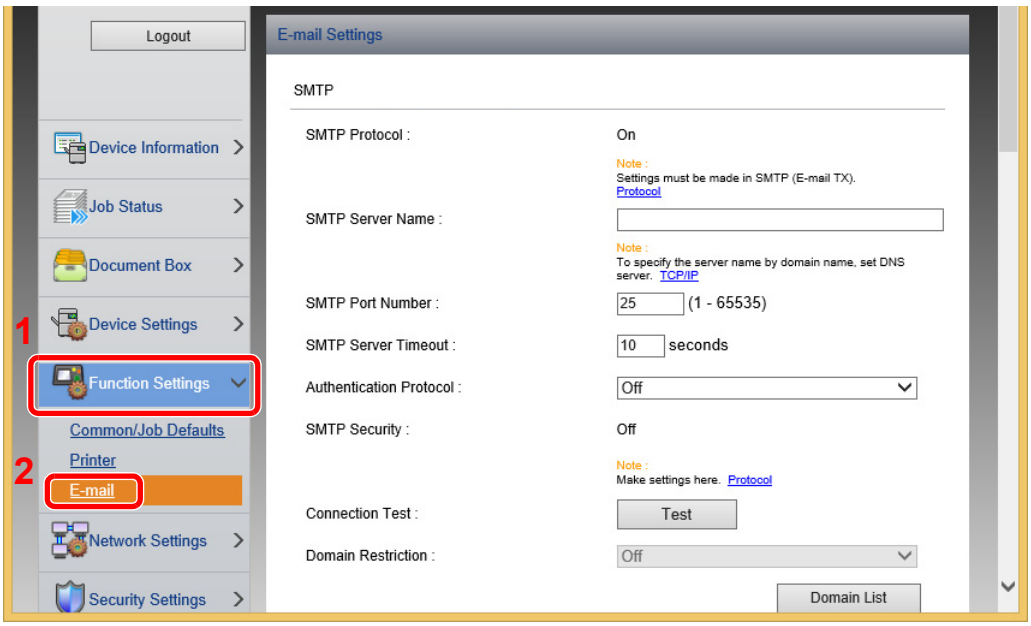

4 Configure the settings.

Enter "SMTP" and "E-mail Send Settings" items.

Setting		Description
SMTP		Set to send e-mail from the machine.
	SMTP Protocol	Displays the SMTP protocol settings. Check that "SMTP Protocol" is set to [**On**]. If [**Off**] is set, click [**Protocol**] and set the SMTP protocol to [**On**].
	SMTP Server Name[*1]	Enter the host name or IP address of the SMTP server.
	SMTP Port Number	Specify the port number to be used for SMTP. The default port number is 25.
	SMTP Server Timeout	Set the amount of time to wait before time-out in seconds.
	Authentication Protocol	To use SMTP authentication, enter the user information for authentication.
	SMTP Security	Set SMTP security. Turn on "SMTP Security" in "SMTP (E-mail TX)" on the [**Protocol Settings**] page.
	Connection Test	Tests to confirm that the E-mail function is operating under the settings without sending a mail.
	Domain Restriction	To restrict the domains, click the [**Domain List**] and enter the domain names of addresses to be allowed or rejected. Restriction can also be specified by e-mail address.

Setting		Description
POP3	**POP3 Protocol**	You don't need to set the following items when you only enable the function of sending e-mail from the machine. Set the following items if you want to enable the function of receiving e-mail on the machine. ➔ **Command Center RX User Guide**
	Check Interval	
	Run once now	
	Domain Restriction	
	POP3 User Settings	
E-mail Send Settings	**E-mail Size Limit**	Enter the maximum size of E-mail that can be sent in kilobytes. When E-mail size is greater than this value, an error message appears and E-mail sending is cancelled. Use this setting if you have set E-mail Size Limit for SMTP server. If not, enter a value of 0 (zero) to enable E-mail sending regardless of the size limit.
	Sender Address[*1]	Specify the sender address for when the machine sends E-mails, such as the machine administrator, so that a reply or non-delivery report will go to a person rather than to the machine. The sender address must be entered correctly for SMTP authentication. The maximum length of the sender address is 128 characters.
	Signature	Enter the signature. The signature is free form text that will appear at the end of the E-mail body. It is often used for further identification of the machine. The maximum length of the signature is 512 characters.
	Function Defaults	Change the function default settings in [**Common/Job Default Settings**] page.

*1 Be sure to enter the items.

5 Click [Submit].

3 Preparation before Use

This chapter explains the following operations.

Loading Paper 3-2
Precaution for Loading Paper 3-2
Selecting the Paper Feeder Units 3-3
Loading in the Cassettes 3-4
Precautions for Outputting Paper 3-8
Paper Stopper 3-8

Loading Paper

Load paper in the cassettes.

Precaution for Loading Paper

When you open a new package of paper, fan the sheets to separate them slightly prior to loading in the following steps.

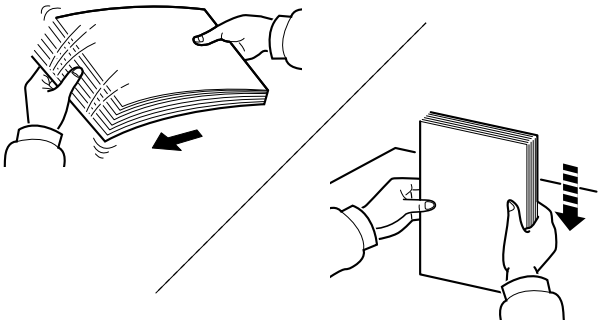

Fan the paper, then tap it on a level surface.

In addition, note the following points.

- If the paper is curled or folded, straighten it before loading. Paper that is curled or folded may cause a jam.
- Avoid exposing opened paper to high humidity as dampness can be a cause of problems. Seal any remaining paper after loading in the multipurpose tray or cassettes back in the paper storage bag.
- If the machine will not be used for a prolonged period, protect all paper from humidity by removing it from the cassettes and sealing it in the paper storage bag.

IMPORTANT

If you print onto used paper (paper already used for printing), do not use paper that is stapled or clipped together. This may damage the machine or cause poor image quality.

NOTE

If you use special paper such as letterhead, paper with holes or paper with pre-prints like logo or company name, refer to the following:

Paper (page 7-5)

Selecting the Paper Feeder Units

Select the paper feeder units according to the size and type of paper.

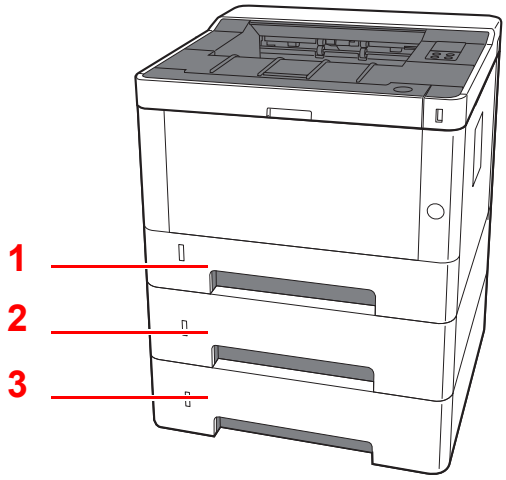

No.	Name	Paper Size	Paper Type	Capacity	Page
1	Cassette 1	A4, B5, A5-R, A5, A6, Legal, Oficio II, Letter, Executive, Statement, Folio, 16K, 216×340mm, B5(ISO), Custom	Plain, Preprinted, Bond, Recycled, Vellum, Rough, Letterhead, Color, Prepunched, Thick, High Quality, Custom 1 to 8	250 sheets (80 g/m^2)	page 3-4
2	Cassette 2				
3	Cassette 3				

NOTE

- The number of sheets that can be held varies depending on your environment and paper type.
- You should not use inkjet printer paper or any paper with a special surface coating. (Such paper may cause paper jams or other faults.)

Loading in the Cassettes

Load paper in the cassettes. The procedures here represent the cassette 1.

1 **Pull the Cassette completely out of the machine.**

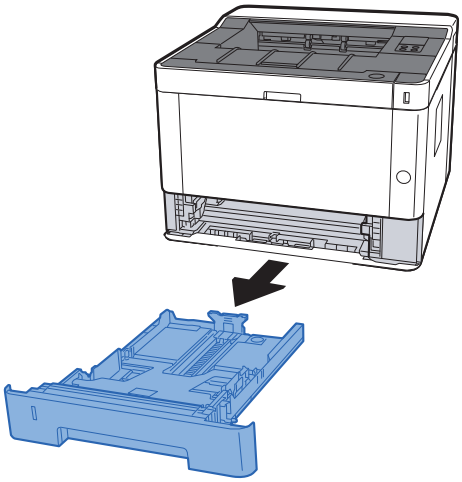

NOTE

If the bottom plate is up, press the bottom plate down until it locks.

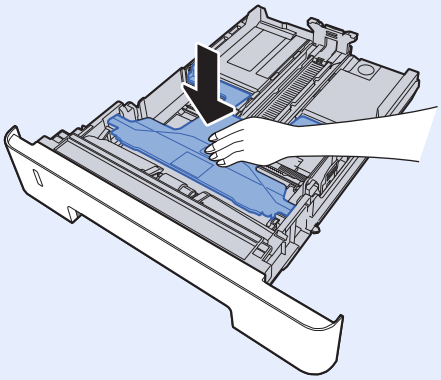

2 Adjust the paper length guide to the paper size required.

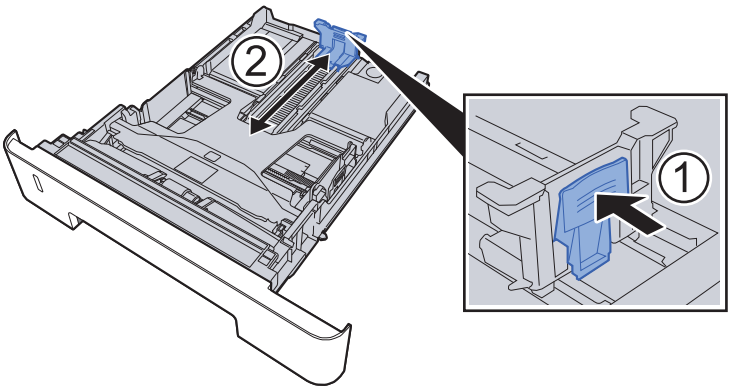

When using Folio, Oficio II or Legal

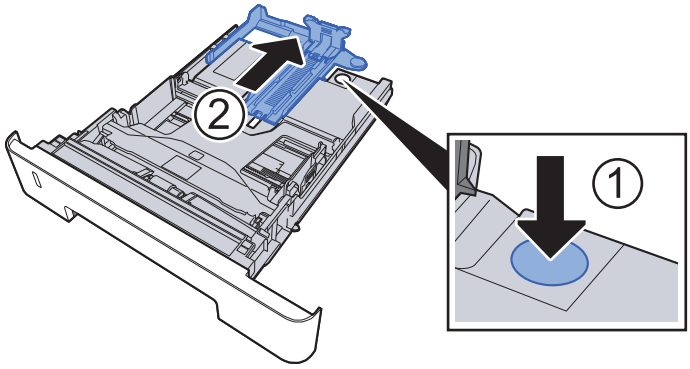

3 Adjust the position of the paper width guides located on the left and right sides of the Cassette.

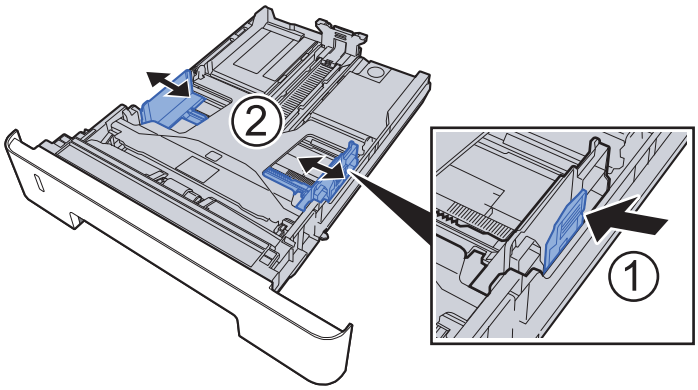

4 Load paper.

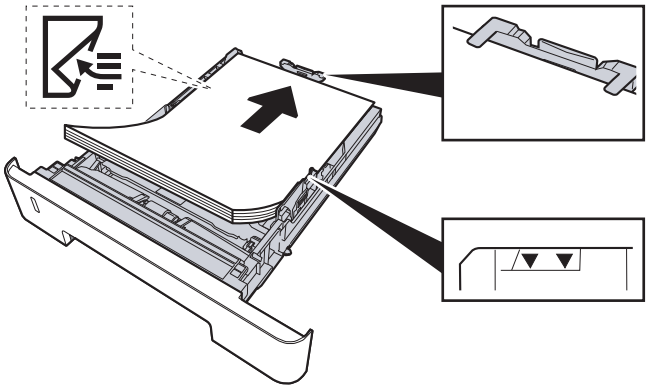

IMPORTANT

- **Load the paper with the print side facing down.**
- **After removing new paper from its packaging, fan the paper before loading it in the multipurpose tray.**

Precaution for Loading Paper (page 3-2)

- **Before loading the paper, be sure that it is not curled or folded. Paper that is curled or folded may cause paper jams.**
- **Ensure that the loaded paper does not exceed the level indicator (see illustration above).**
- **If paper is loaded without adjusting the paper length guide and paper width guide, the paper may skew or become jammed.**

5 Gently push the Cassette back in.

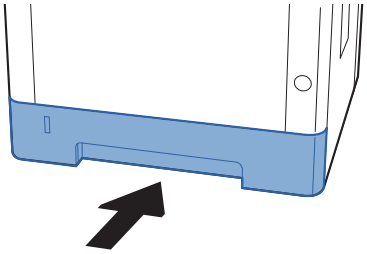

IMPORTANT

Push all cassettes all the way in. Paper jams may result if a cassette is not pushed all the way in.

NOTE

There is a paper gauge on the left side of the front of the cassette to indicate the remaining paper supply.

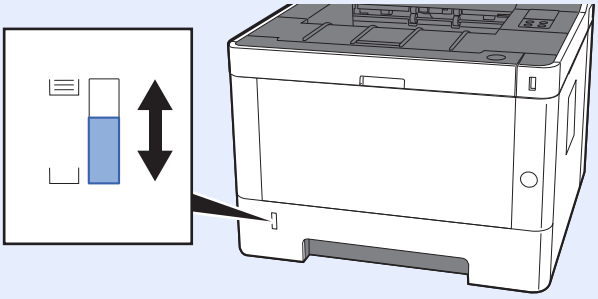

6 Configure the function.

Use the Configuration Tool to set the size and type of paper used in the paper cassette.

Paper size (page 4-18)
Media type (page 4-18)

Precautions for Outputting Paper

Paper Stopper

When using paper A4/letter or larger, open the paper stopper shown in the figure.

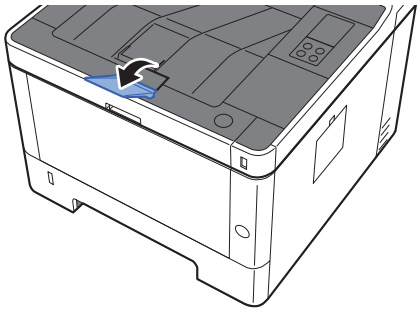

4 Printing from PC

This chapter explains the following topics:

Printer Driver Properties Screen 4-2
Displaying the Printer Driver Help 4-3
Changing the Default Printer Driver Settings (Windows 8.1) 4-3
Printing from PC 4-4
Printing on Standard Sized Paper 4-4
Printing on Non-standard Sized Paper 4-6
Canceling Printing from a Computer 4-9
Printing from the Handheld Device 4-10
Printing by Google Cloud Print 4-10
Printing by Mopria 4-10
Printing with Wi-Fi Direct 4-10
Monitoring the Printer Status (Status Monitor) 4-11
Accessing the Status Monitor 4-11
Exiting the Status Monitor 4-11
Quick View State 4-11
Printing Progress Tab 4-12
Paper Tray Status Tab 4-12
Toner Status Tab 4-12
Alert Tab 4-13
Status Monitor Context Menu 4-13
Status Monitor Notification Settings 4-14
Configuration Tool 4-15
Accessing the Configuration Tool 4-15
Exiting the Configuration Tool 4-16
Configuration Tool Settings Screen 4-17

Printer Driver Properties Screen

The printer driver properties screen allows you to configure a variety of print-related settings.

➡ **Printer Driver User Guide**

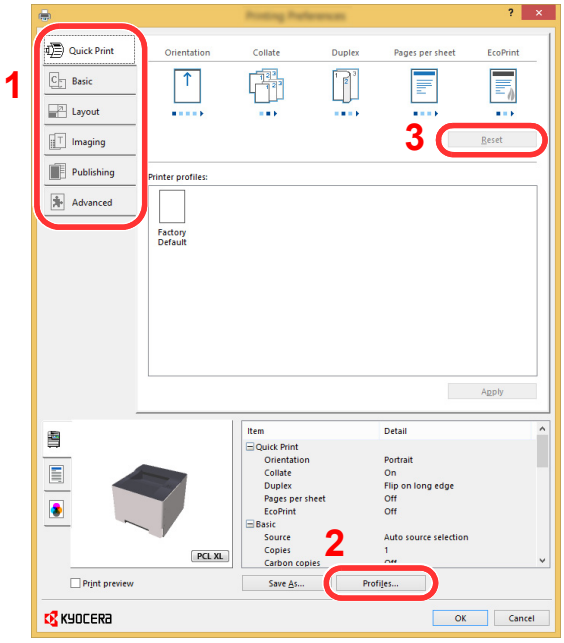

No.	Description
1	**[Quick Print] tab** Provides icons that can be used to easily configure frequently used functions. Each time you click an icon, it changes to an image resembling the print results and applies the settings. 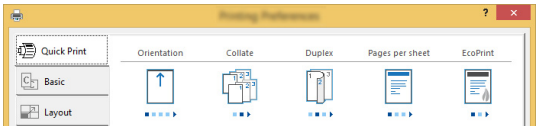 **[Basic] tab** This tab groups basic functions that are frequently used. You can use it to configure the paper size and duplex printing. **[Layout] tab** This tab lets you configure settings for printing various layouts, including booklet printing, combine mode, poster printing, and scaling. **[Imaging] tab** This tab lets you configure settings related to the quality of the print results. **[Publishing] tab** This tab lets you create covers and inserts for print jobs and put inserts between sheets of OHP film. **[Advanced] tab** This tab lets you configure settings for adding text pages or watermarks to print data.
2	**[Profiles]** Printer driver settings can be saved as a profile. Saved profiles can be recalled at any time, so it's a convenient practice to save frequently used settings.
3	**[Reset]** Click to revert settings to their initial values.

Displaying the Printer Driver Help

The printer driver includes Help. To learn about print settings, open the printer driver print settings screen and display Help as explained below.

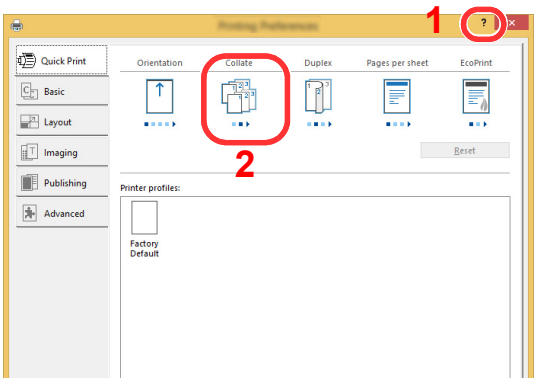

1 Click the [**?**] button in the upper right corner of the screen.

2 Click the item you want to know about.

NOTE

The Help appears, even when you click the item you want to know about and press the [**F1**] key on your keyboard.

Changing the Default Printer Driver Settings (Windows 8.1)

The default printer driver settings can be changed. By selecting frequently used settings, you can omit steps when printing. For the settings, refer to the following:

➔ **Printer Driver User Guide**

1 **In charms on Desktop, click [Settings], [Control Panel], and then [Devices and Printers].**

2 **Right-click the printer driver icon of the machine, and click the [Printer properties] menu of the printer driver.**

3 **Click the [Basic] button on the [General] tab.**

4 **Select the default settings and click the [OK] button.**

Printing from PC

This section provides the printing method using the KX DRIVER.

NOTE

- To print the document from applications, install the printer driver on your computer from the supplied DVD (Product Library).
- In some environments, the current settings are displayed at the bottom of the printer driver.

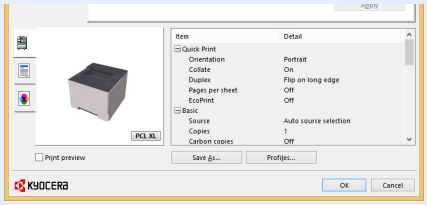

- When printing the cardstock or envelopes, load the cardstock or envelopes in the multipurpose tray before performing the following procedure.

Loading Paper in the Multipurpose Tray (page 5-2)

Printing on Standard Sized Paper

If you loaded a paper size that is included in the print sizes of the machine, select the paper size in the [**Basic**] tab of the print settings screen of the printer driver.

1 Display the screen.

Click [**File**] and select [**Print**] in the application.

2 Configure the settings.

1 Select the machine from the "Printer" menu and click the [**Properties**] button.

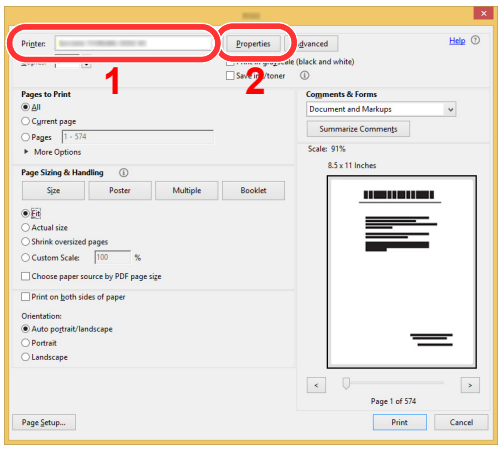

2 Select the [**Basic**] tab.

3 Click "Print size" menu and select the paper size to use for printing.

To load the paper of size that is not included in print sizes of the machine such as cardstock or envelopes, the paper size needs to be registered.

➔ Printing on Non-standard Sized Paper (page 4-6)

To print on the special paper such as thick paper or transparency, click "Media type" menu and select the media type.

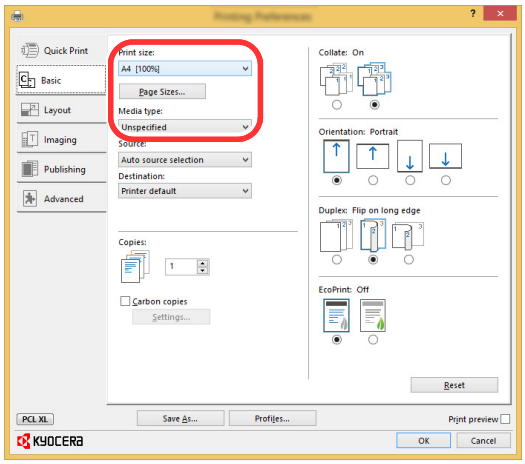

4 Click [**OK**] button to return to the Print dialog box.

3 Start printing.

Click the [**OK**] button.

Printing on Non-standard Sized Paper

If you loaded a paper size that is not included in the print sizes of the machine, register the paper size in the [**Basic**] tab of the print settings screen of the printer driver.

The registered size can be selected from the "Print size" menu.

1 Display the screen.

1 In charms on Desktop, click [**Settings**], [**Control Panel**], and then [**Devices and Printers**].

> **NOTE**
> In Windows 7, click [**Start**] button on the Windows, and then click [**Devices and Printers**].

2 Right-click the printer driver icon of the machine, and click the [**Printer properties**] menu of the printer driver.

3 Click the [**Basic**] button on the [**General**] tab.

2 Register the paper size.

1 Click the [**Basic**] tab.

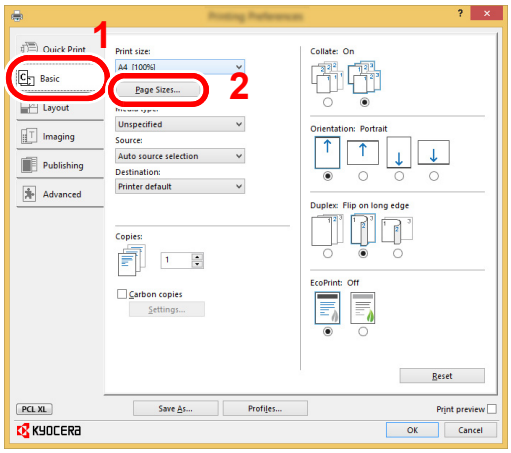

2 Click the [**Page Size...**] button.

3 Click the [**New**] button.

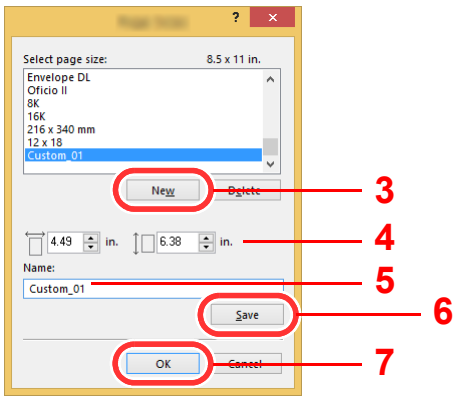

4 Enter the paper size.

5 Enter the name of the paper.

6 Click the [**Save**] button.

7 Click the [**OK**] button.

8 Click the [**OK**] button.

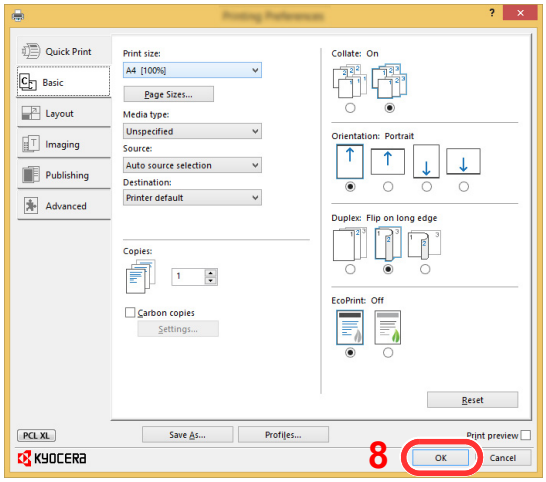

3 Display the print settings screen.

Click [**File**] and select [**Print**] in the application.

4 Select the paper size and type of non-standard size paper.

1 Select the machine from the "Printer" menu and click the [**Properties**] button.

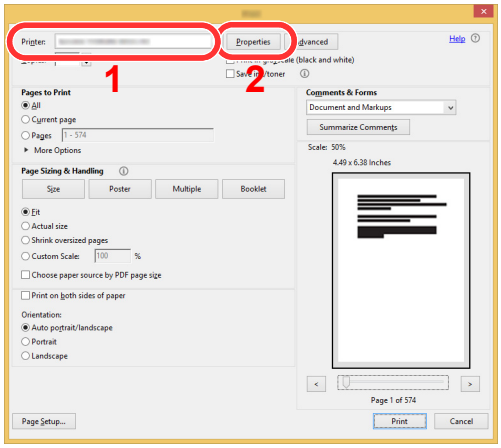

2 Select the [**Basic**] tab.

3 Click "Print size" menu and select the paper size registered in step 2.

To print on the special paper such as thick paper or transparency, click "Media type" menu and select the media type.

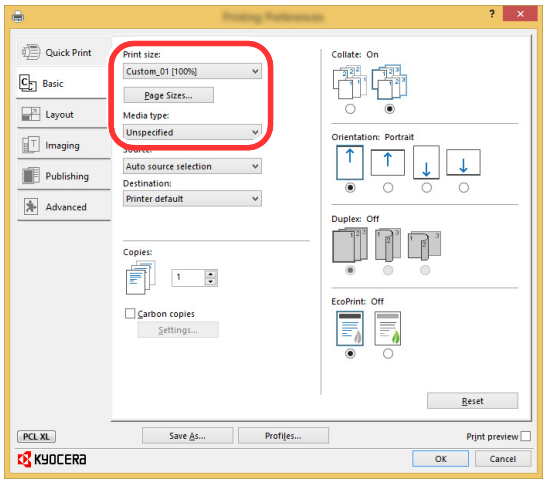

NOTE

If you loaded a postcard or envelope, select [**Cardstock**] or [**Envelope**] in the "Media type" menu.

4 Select the paper source in the "Source" menu.

5 Click [**OK**] button to return to the Print dialog box.

5 Start printing.

Click the [**OK**] button.

Canceling Printing from a Computer

To cancel a print job executed using the printer driver before the printer begins printing, do the following:

NOTE

When canceling printing from this machine, refer to the following:

Pausing and Resuming a Job (page 5-5)

1 **Double-click the printer icon ( ) displayed on the taskbar at the bottom right of the Windows desktop to display a dialog box for the printer.**

2 **Click the file for which you wish to cancel printing and select [Cancel] from the "Document" menu.**

Printing from the Handheld Device

This machine supports the Google Cloud Print, Mopria and Wi-Fi Direct.

According to the supported OS and application, you can print the job from any handheld device or computer without installing a printer driver.

Printing by Google Cloud Print

Google Cloud Print is a printing service provided by Google. This service enables a user with a Google account to print from a machine connected to the Internet.

The machine can be configured in the Command Center RX.

Command Center RX User Guide

NOTE

A Google account is necessary to use Google Cloud Print. Obtain a Google account if you do not have one.

It is also necessary to register the machine with the Google Cloud Print service in advance. The machine can be registered from a PC connected to the same network.

Printing by Mopria

NOTE

This function can only be used on models with the wireless network function.

Mopria is a standard on printing function included in Android 4.4 or later products. Mopria Print Service needs to be installed and enabled in advance.

For details on how to use, refer to a Web site of Mopria Alliance.

Printing with Wi-Fi Direct

NOTE

This function can only be used on models with the wireless network function.

Wi-Fi Direct is a wireless LAN standard that Wi-Fi Alliance has been established. This is one of the functions of the wireless LAN, without a wireless LAN access point or wireless LAN router, between devices can communicate directly on a peer to peer basis.

The printing procedure by the Wi-Fi Direct is the same as that from the normal handheld devices.

When you use a printer name or Bonjour name on the port settings of the printer property, you can print the job by specifying the name at Wi-Fi Direct connection.

When you use an IP address for the port, specify the IP address of this machine.

Monitoring the Printer Status (Status Monitor)

The Status Monitor monitors the machine status and provides an ongoing reporting function.

NOTE

When you activate Status Monitor, check the status below.

- KX DRIVER is installed.

Accessing the Status Monitor

The Status Monitor also starts up when printing is started.

Exiting the Status Monitor

Use either of the methods listed below to exit the Status Monitor.

- Exit manually:
  Click the settings icon and select Exit in the menu to exit the Status Monitor.
- Exit automatically:
  The Status Monitor automatically shuts down after 7 minutes if it is not being used.

Quick View State

The status of the machine is displayed using icons. Detailed information is displayed when the Expand button is clicked.

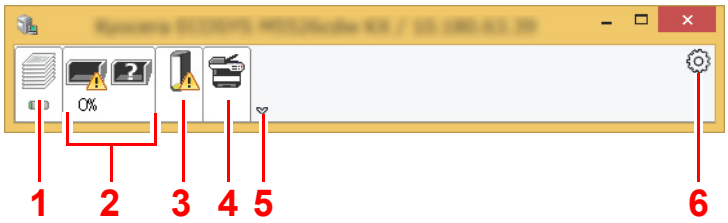

1 Printing progress tab
2 Paper tray status tab
3 Toner status tab
4 Alert tab
5 Expand button
6 Settings icon

Detailed information is displayed by clicking on each icon tab.

Printing Progress Tab

The status of the print jobs is displayed.

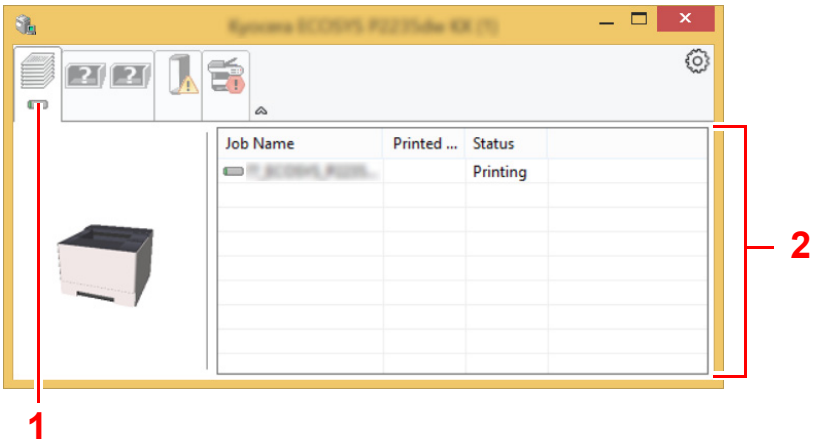

1 Status icon

2 Job list

Select a job on the job list and it can be canceled using the menu displayed with a right-click.

Paper Tray Status Tab

Information is displayed about the paper in the printer and about the amount of paper remaining.

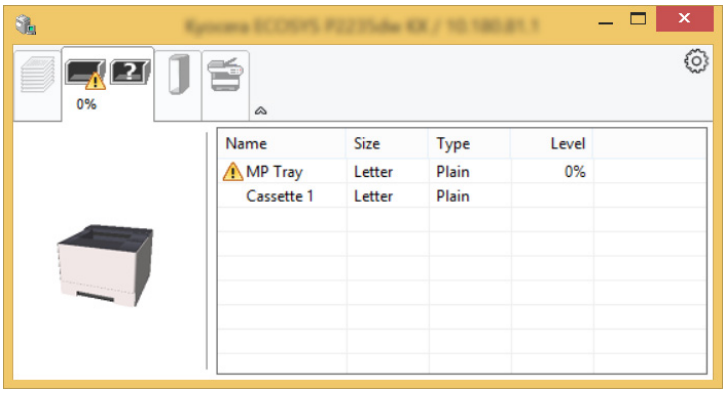

Toner Status Tab

The amount of toner remaining is displayed.

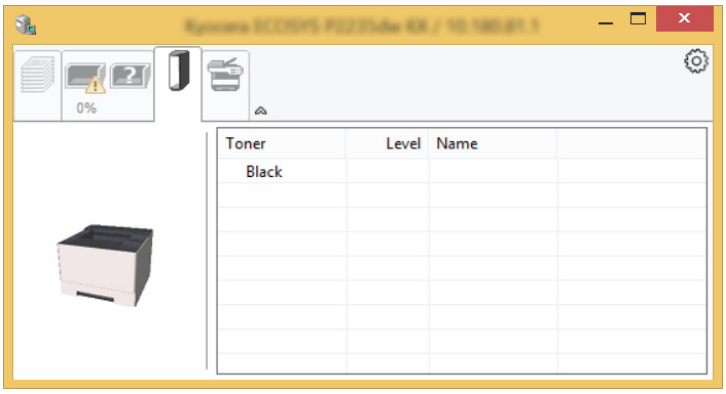

Alert Tab

If an error occurs, a notice is displayed using a 3D image and a message.

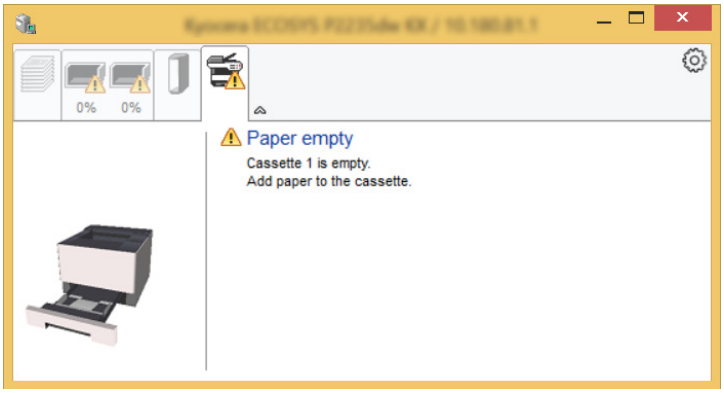

Status Monitor Context Menu

The following menu is displayed when the settings icon is clicked.

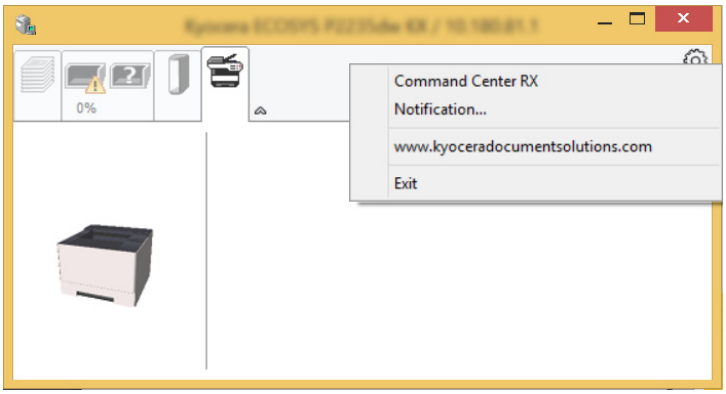

- **Command Center RX**
  If the printer is connected to a TCP/IP network and has its own IP address, use a web browser to access the Command Center RX to modify or confirm the network settings. This menu is not displayed when using USB connection.
  ➔ **Command Center RX User Guide**
- **Notification…**
  This sets the display of the Status Monitor.
  ➔ Status Monitor Notification Settings (page 4-14)
- **www.kyoceradocumentsolutions.com**
  Open our website.
- **Exit**
  Exits the Status Monitor.

Status Monitor Notification Settings

Click the setting icon to display valid events in the status monitor notification screen.

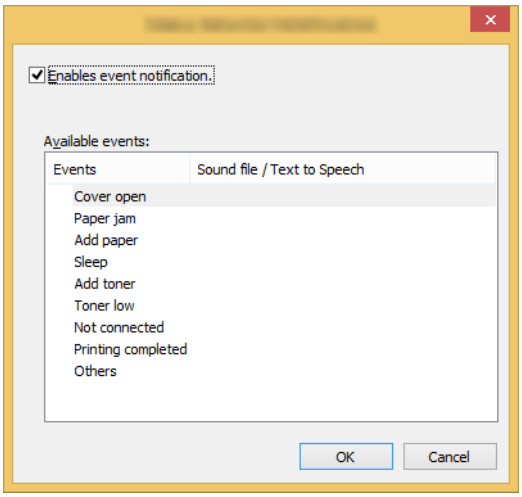

Select whether notification is performed when an error in the event list occurs.

1 Select Enable event notification.

If this setting is set to Off, then the Status Monitor will not start up even when printing is executed.

2 Select an event to use with the text to speech function in Available events.

3 Click Sound file / Text to Speech column.

Click the browse (...) button to notify the event by sound file.

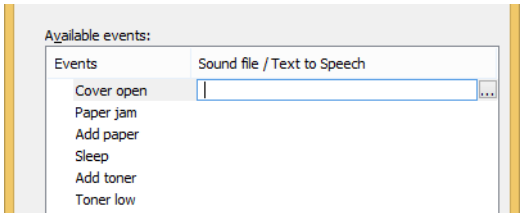

NOTE

The available file format is WAV.

When customizing the message texts to read on the screen aloud, enter the texts in the text box.

Configuration Tool

You can use the Configuration Tool to check and change settings on the machine.

Accessing the Configuration Tool

1 Insert the DVD.

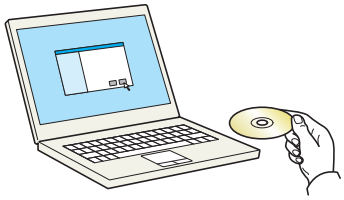

NOTE

- Installation on Windows must be done by a user logged on with administrator privileges.
- If the "Welcome to the Found New Hardware Wizard" dialog box displays, select [**Cancel**].
- If the autorun screen is displayed, click [**Run setup.exe**].
- If the user account management window appears, click [**Yes**] ([**Allow**]).

2 Display the screen.

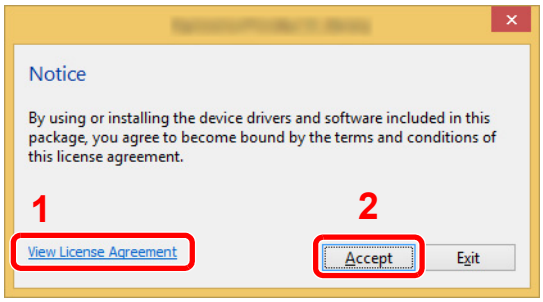

1 Click [**View License Agreement**] and read the License Agreement.

2 Click [**Accept**].

3 Select [Maintenance].

4 [Configuration Tool] > [OK]

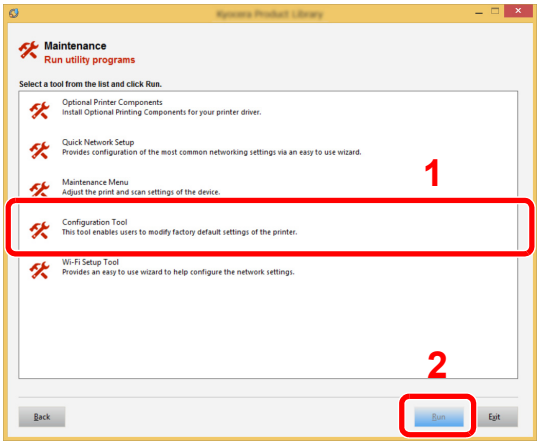

5 Select the driver of the machine. > [OK]

The Configuration Tool window appears.

Exiting the Configuration Tool

Use either of the methods listed below to exit the Configuration Tool.

- Exit using the Close button:

  Click × in the top-right corner of the Configuration Tool window.

- Exit using the OK or Cancel button:

  Clicking OK exits the Configuration Tool after applying the modified printer settings. Clicking Cancel exits the Configuration Tool without applying the modified printer settings.s

Configuration Tool Settings Screen

Device Defaults Settings

Configure printer driver default settings and the energy save function of the machine.

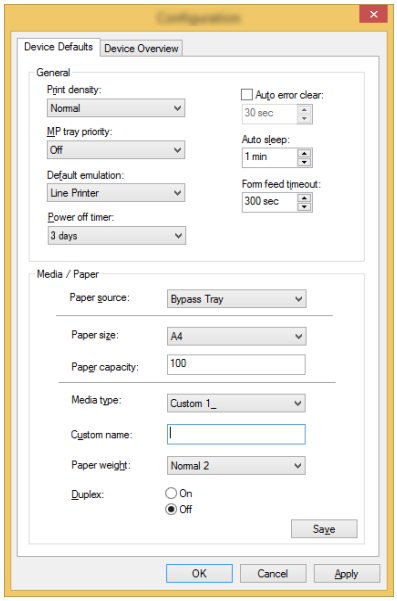

Item	Description
Print density	Adjust print density. **Value: Light, Medium light, Normal, Medium dark, Dark**
MP tray priority	If paper is set in the multipurpose tray then it is possible for priority to be given to that multipurpose tray in the paper feed. **Values** **Off: The printer driver settings are followed.** **Auto Feed: If Auto is selected in the printer driver and there is paper in the multipurpose tray then the paper feed will be from the multipurpose tray.** **Always: If there is paper in the multipurpose tray then the paper feed will be from the multipurpose tray regardless of what is set in the printer driver.**
Default emulation	Select the emulation for operating this machine by commands oriented to other types of printers. **Values: Line Printer, IBM Proprinter, EPSON LQ-850, PCL 6, KPDL, KPDL(Auto)**
Power off timer (models for Europe)	Select whether to turn off the power automatically after a period of inactivity. **Value: 1 hour, 2 hours, 3 hours, 4 hours, 5 hours, 6 hours, 9 hours, 12 hours, 1 day, 2 days, 3 days, 4 days, 5 days, 6 days, 1 week**
Auto error clear	If an error occurs during processing, processing stops to wait for the next step to be taken by the user. In the Auto Error Clear mode, automatically clear the error after a set amount of time elapses. **Value: Off, On (5 to 495 seconds (in 5 second increments))**
Auto sleep	Set amount of time before entering Sleep. **Value** **For Europe** **1 to 120 minutes (1 minute increments)** **Except for Europe** **1 to 240 minutes (1 minute increments)**

Item	Description
Form feed timeout	Receiving print data from the computer, the machine may sometimes wait if there is no information signaling that the last page does not have any more data to be printed. When the preset timeout passes, the machine automatically prints paper. The options are between 5 and 495 seconds. **Value: 5 to 495 seconds (in 5 second increments)**
Paper source	Select the default paper source. **Values: Bypass Tray, Cassette 1 (to 3)** **NOTE** [**Cassette 2**] to [**Cassette 3**] are shown when the optional paper feeder is installed.
Paper size	Select the paper size to be used. **Values:** **Cassette 1 (to3): Letter, Legal, Statement, Executive, A4, A5, A5-R, A6, Folio, B5 (JIS), B5 (ISO), Oficio II, 216 × 340 mm, 16K, Custom** **Bypass Tray: Letter, Legal, Statement, Executive, A4, A5, A5-R, A6, B6, Folio, B5 (JIS), B5 (ISO), Envelope #10, Envelope #9, Envelope #6, Envelope Monarch, Envelope C5, Envelope DL, Oficio II, 216 × 340 mm, 16K, Hagaki (Cardstock), OufukuHagaki (Return postcard), Youkei 2, Youkei 4, Custom**
Paper capacity	Show the maximum number of sheets that can be loaded in the selected paper source.
Media type	Select the media type of paper to be used. **Values: Plain, Transparency, Preprinted, Labels, Bond, Recycled, Vellum, Rough, Letterhead, Color, Prepunched, Envelope, Cardstock, Thick, High quality, Custom 1 to 8** **NOTE** You can select [**Custom 1**] to [**Custom 8**] to change the paper type name and duplex printing settings.
Custom name	When [**Custom 1**] to [**Custom 8**] is selected in "Media Type", you can assign a name to the set paper type. Names should be not more than 16 characters.
Duplex	When [**Custom 1**] to [**Custom 8**] is selected in "Media Type", you can select duplex printing settings. **Value: Off, On**
Paper weight	Set the paper weight (thickness) of the paper type selected in "Media type". **Value: Light, Normal 1 to 3, Heavy 1 to 3, Extra Heavy**

Device Overview

Display machine information.

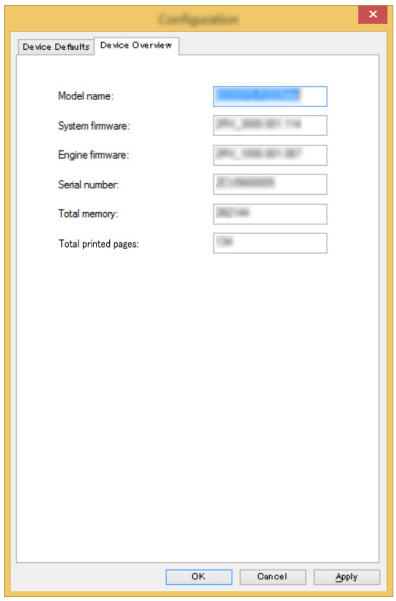

Item	Description
Model name	Displays the machine's model name.
System firmware	Displays the version of the machine's system firmware.
Engine firmware	Displays the version of the machine's engine firmware.
Serial number	Displays the machine's serial number.
Total memory	Displays the machine's memory capacity in bytes.
Total printed pages	Displays the total number of pages printed on the machine.

5 Operation on the Machine

This chapter explains the following topics:

Loading Paper in the Multipurpose Tray 5-2
Pausing and Resuming a Job 5-5
Canceling Jobs 5-5
Print Report 5-6

Loading Paper in the Multipurpose Tray

For details of the supported paper sizes, refer to the following:

Choosing the Appropriate Paper (page 7-6)

For the paper type setting, refer to the following:

Media type (page 4-18)

Be sure to use the multipurpose tray when you print on any special paper.

IMPORTANT

- **If you are using a paper weight of 106 g/m^2 or more, set the media type to Thick and set the weight of the paper you are using.**
- **Remove each transparency from the top tray as it is printed. Leaving transparencies in the top tray may cause a paper jam.**

The capacity of the multipurpose tray is as follows.

- Plain paper (80 g/m^2), recycled paper or color paper: 100 sheets
- Thick paper (209 g/m^2): 5 sheets
- Thick paper (157 g/m^2): 5 sheets
- Thick paper (104.7 g/m^2): 70 sheets
- Hagaki (Cardstock): 15 sheets
- Envelope DL, Envelope C5, Envelope #10, Envelope #9, Envelope #6 3/4, Envelope Monarch, Youkei 4, Youkei 2: 5 sheets
- OHP film: 1 sheet
- Coated: 30 sheets

NOTE

- When you load custom size paper, enter the paper size by referring to the following:

Configuration Tool Settings Screen (page 4-17)

- When you use special paper such as transparencies or thick paper, select the media type by referring to the following:

Media type (page 4-18)

1 Open the multipurpose tray.

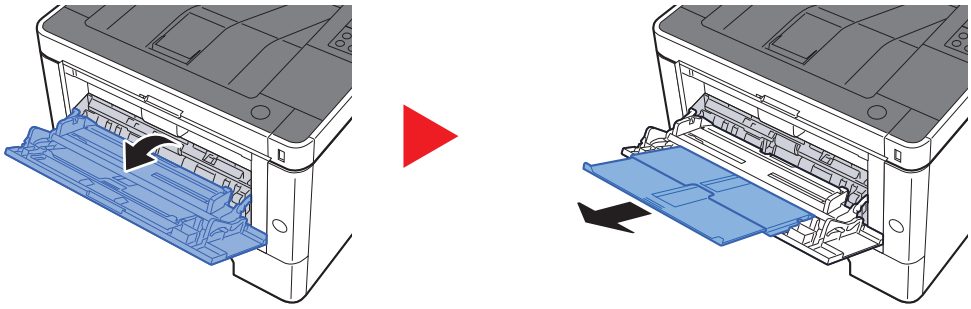

2 Adjust the multipurpose tray size.

Paper sizes are marked on the multipurpose tray.

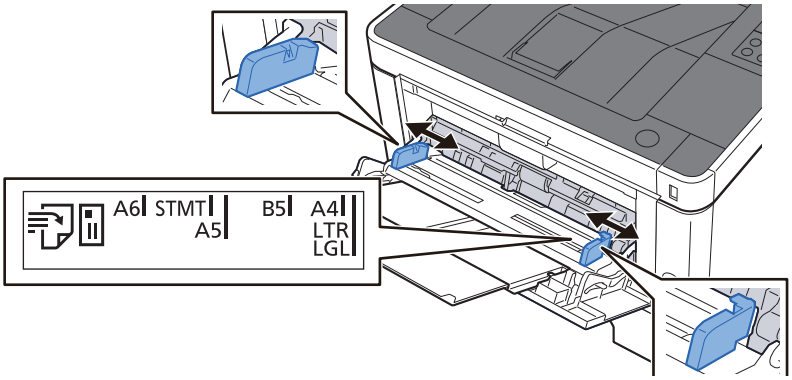

3 Load paper.

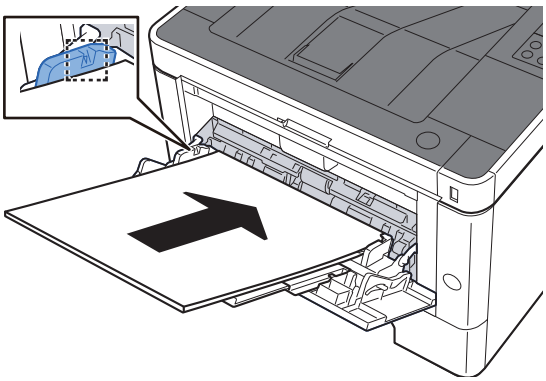

Insert the paper along the paper width guides into the tray until it stops.

After removing new paper from its packaging, fan the paper before loading it in the multipurpose tray.

➔ Precaution for Loading Paper (page 3-2)

IMPORTANT

- **When loading the paper, keep the print side facing up.**
- **Curled paper must be uncurled before use.**
- **When loading paper into the multipurpose tray, check that there is no paper left over in the tray from a previous job before loading the paper. If there is just a small amount of paper left over in the multipurpose tray and you want to add more, first remove the left-over paper from the tray and include it with the new paper before loading the paper back into the tray.**
- **If there is a gap between the paper and the paper width guides, readjust the guides to fit the paper in order to prevent skewed feeding and paper jams.**
- **Ensure that the loaded paper does not exceed the load limits.**

4 Specify the type of paper loaded in the multipurpose tray using Configuration Tool.

➔ Media type (page 4-18)

When you load envelopes or cardstock in the multipurpose tray

Load the paper with the print side facing up. For the procedure for printing, refer to the following:

➔ **Printer Driver User Guide**

Example: When printing the address.

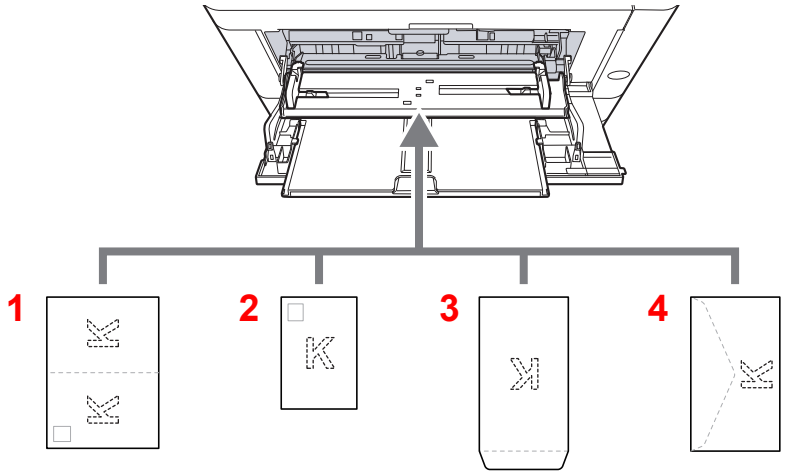

1 Oufuku hagaki (Return postcard)

2 Hagaki (Cardstocks)

3 Portrait form envelopes

4 Landscape form envelopes

IMPORTANT

- **Use unfolded Oufuku hagaki (Return postcard).**
- **How to load envelopes (orientation and facing) will differ depending on the type of envelope. Be sure to load it in correctly, otherwise printing may be done in the wrong direction or on the wrong face.**

NOTE

When you load envelopes in the multipurpose tray, select the envelope type by referring to the following:

➔ Media type (page 4-18)

Pausing and Resuming a Job

To pause a job that is in progress, select the [**Cancel**] key. While the job is paused, the indicator blinks as follows.

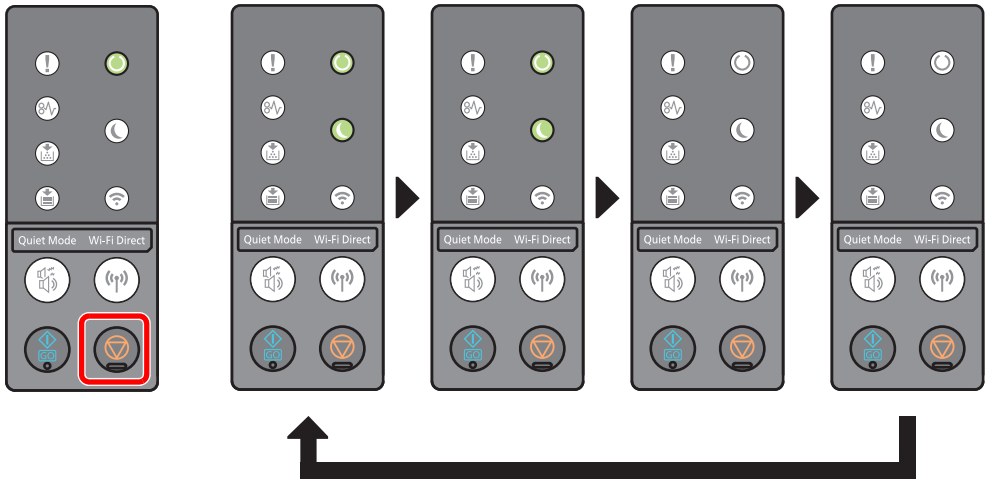

To resume the job, select the [**Cancel**] key again.

Canceling Jobs

To cancel a job that is in progress, press the [**Cancel**] key for one second. When the job is canceled, the indicator blinks as follows.

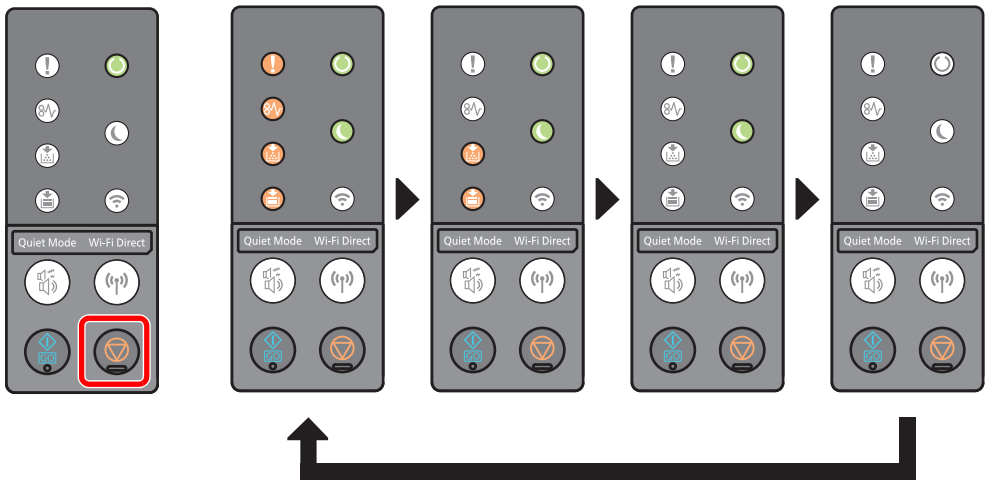

Print Report

Print reports to check the machine settings, status.

Print Status Page

Prints the status page, allowing you to check the information including current settings, memory capacity, and optional equipment installed.

To print a status page, press the [**Go**] key for 3 to 9 seconds.

When the machine is ready to print the report, the indicator blinks as follows.

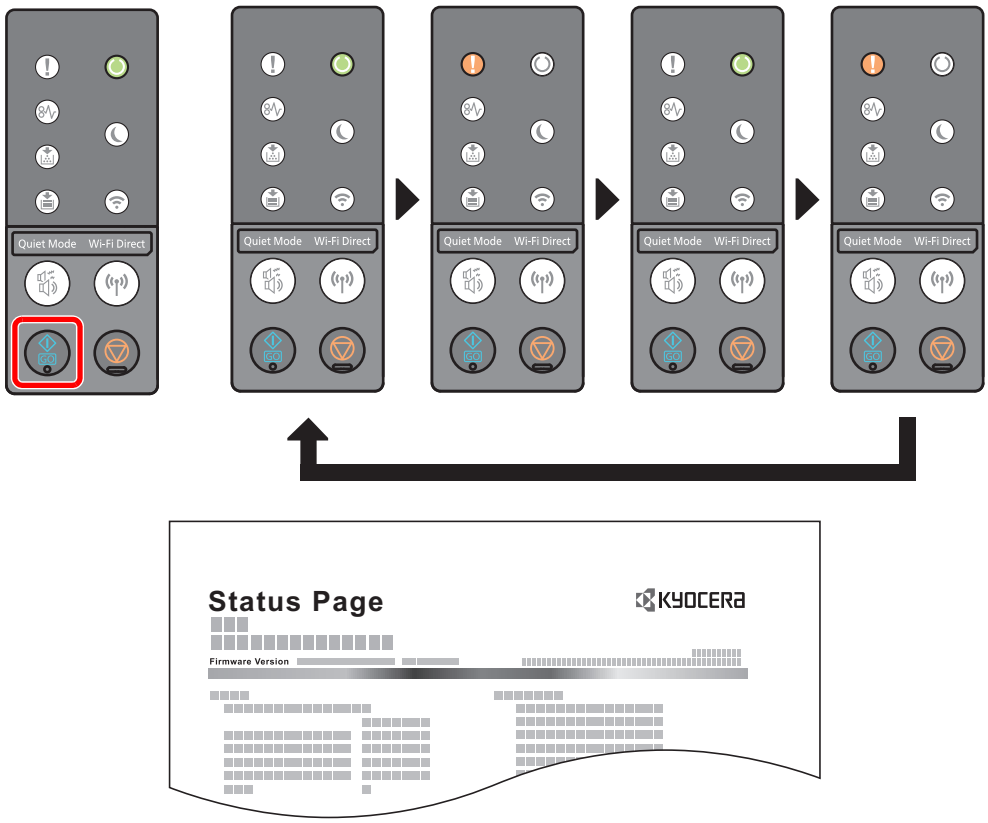

Prints Service Status Page

This provides more detailed information than the status page. Normally your service technician prints this page when performing maintenance.

To print the service status page, press the [**Go**] key for 10 seconds or more.

When the machine is ready to print the report, the indicator blinks in the same way as for the status page.

NOTE

The network status page shows the firmware version of the network interface, the network address, network protocol, and other information.

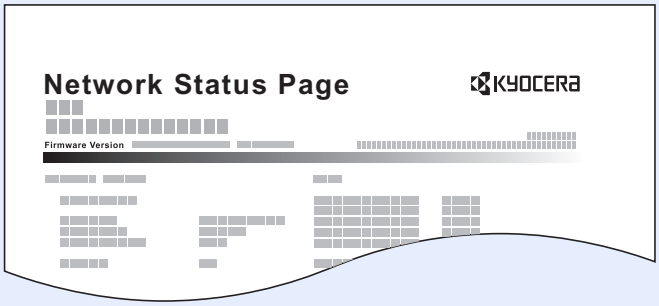

6 Troubleshooting

This chapter explains the following topics:

Regular Maintenance 6-2
- Cleaning 6-2
- Cleaning the inside of the Machine 6-2
- Toner Container Replacement 6-6
- Loading Paper 6-9

Using the Maintenance Menu 6-10

Troubleshooting 6-11
- Solving Malfunctions 6-11
- Machine Operation Trouble 6-11
- Printed Image Trouble 6-13

Indicator pattern when an error occurs 6-16
- Maintenance Indication 6-16
- Error Indication 6-26

Clearing Paper Jams 6-28
- Remove any jammed paper in the Multipurpose Tray 6-29
- Remove any jammed paper in Cassette 1 6-30
- Remove any jammed paper in Cassette 2 6-32
- Remove any jammed paper in Cassette 3 6-34
- Remove any jammed paper in Rear Cover 6-36
- Remove any jammed paper inside of the Machine 6-40

Regular Maintenance

Cleaning

Clean the machine regularly to ensure optimum printing quality.

CAUTION

For safety, always unplug the power cord before cleaning the machine.

Cleaning the inside of the Machine

To avoid print quality problems, the interior of the machine must be cleaned with every toner container replacement.

1 **Open the front cover.**

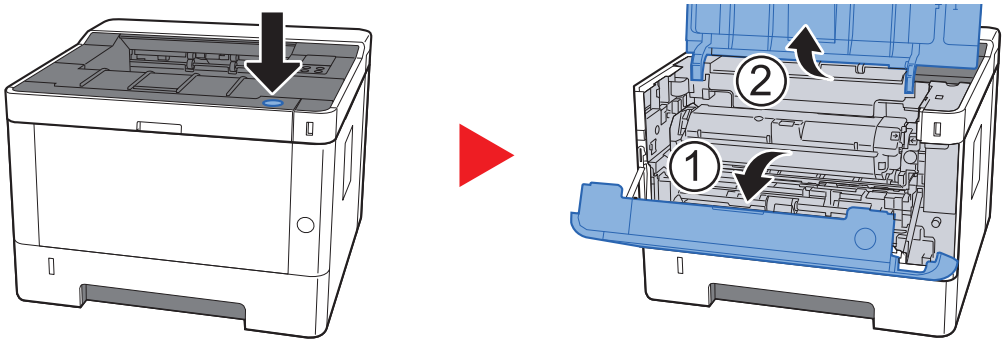

2 **Lift the developer unit together with the toner container out of the machine.**

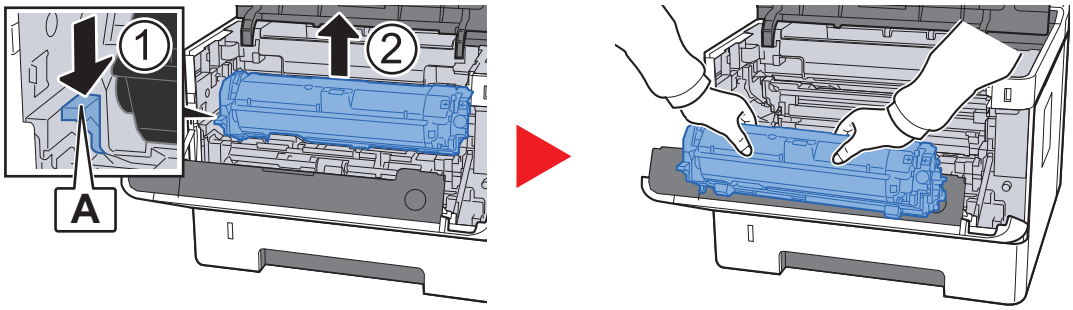

IMPORTANT

Do not touch the developer roller or subject the developer roller to shock. Print quality will be degraded.

3 Place the developer unit together with the toner container flat on a clean, level surface.

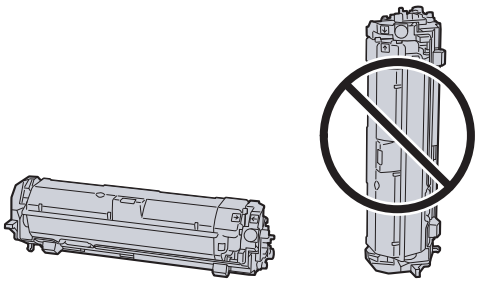

IMPORTANT

Do not place the developer unit together with the toner container on end.

4 Remove the drum unit from the machine.

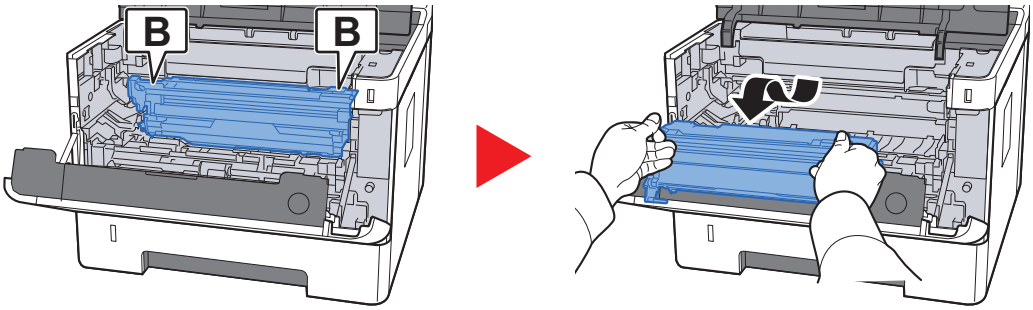

IMPORTANT

Do not touch the drum or subject the drum to shock. Print quality will be degraded if the drum is exposed to direct sunlight or intense light.

5 Place the drum unit flat on a clean, level surface.

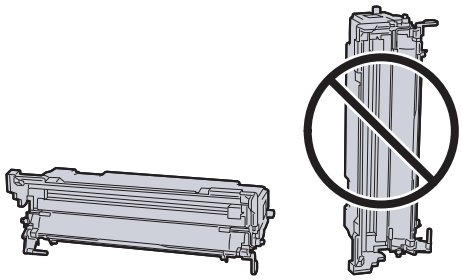

IMPORTANT

Do not place the drum unit on end.

6 **Use a clean, lint free cloth to clean dust and dirt away from the metal registration roller.**

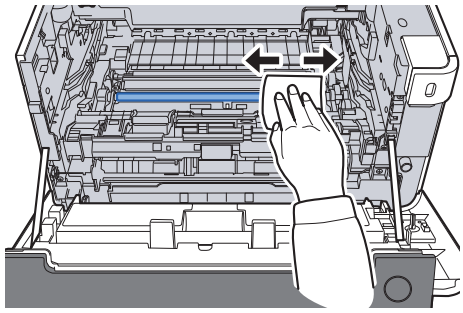

7 **On the drum unit, slide the main charger cleaner back and forth 2 or 3 times to clean the charger wire.**

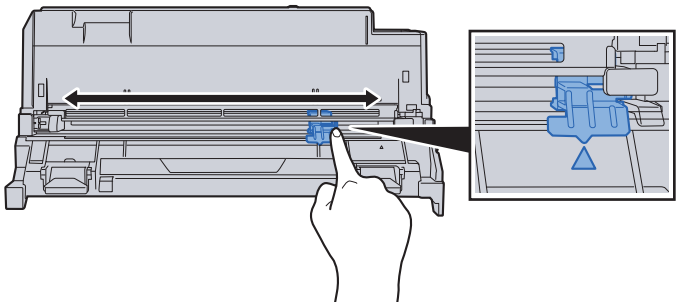

IMPORTANT

- **Before using the charger cleaner for the first time, remove the tape that holds the charger cleaner knob.**
- **After cleaning, make sure you restore the main charger cleaner to its home position (CLEANER HOME POSITION).**

8 **When cleaning is complete, return the drum unit to the original position.**

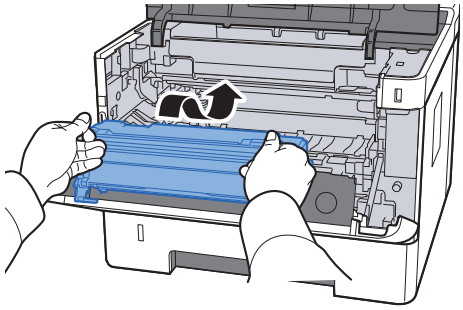

9 **Return the developer unit together with the toner container to its position, aligning the guides at both ends with the slots in the machine.**

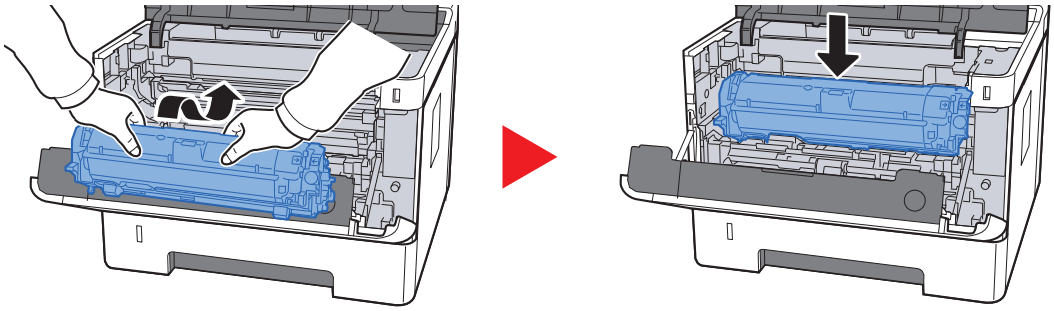

10 **Close the front cover.**

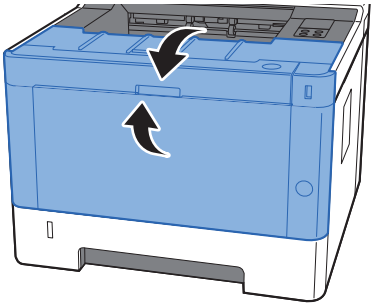

Toner Container Replacement

When toner is empty, the [**Toner**] indicator lights.

When toner runs low, the [**Toner**] indicator blinks. Make sure you have a new toner container available for replacement.

Frequency of Toner Container Replacement

The life of the toner containers depends on the amount of toner required to accomplish your printing jobs. According to ISO/IEC 19752 and EcoPrint switched off the toner container can print as follows (A4/Letter paper is assumed):

Life of the Toner Container (Printable pages)
3,000 images

NOTE

- The average number of images that can be printed with the toner containers provided with the machine is 1,000 images.
- To maintain quality, we recommend using genuine Kyocera toner containers, which must pass numerous quality inspections.

CAUTION

Do not attempt to incinerate parts which contain toner. Dangerous sparks may cause burns.

Replacing the Toner Container

1 **Open the front cover.**

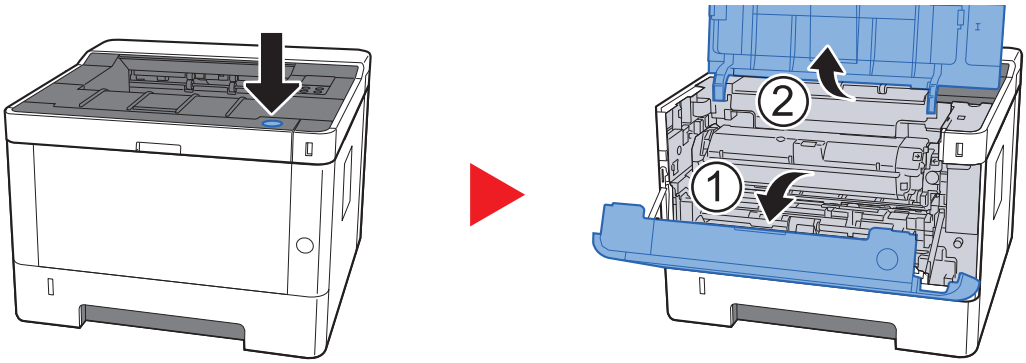

2 **Unlock the toner container.**

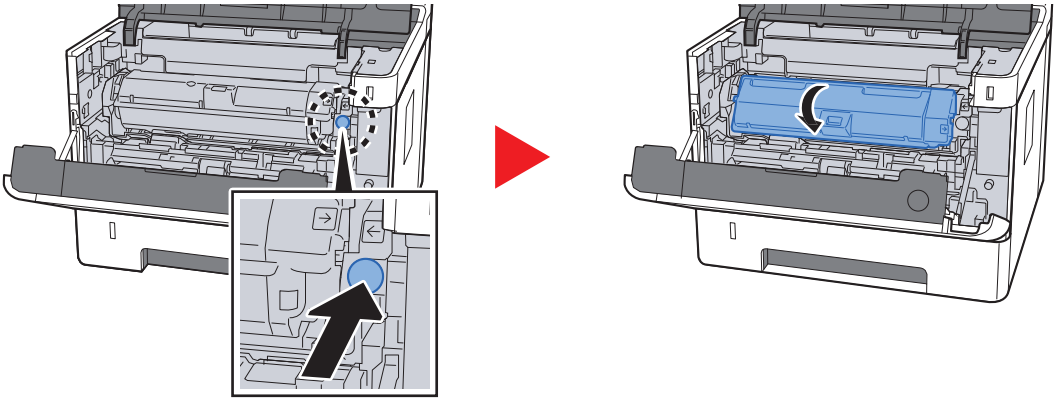

3 **Remove the toner container.**

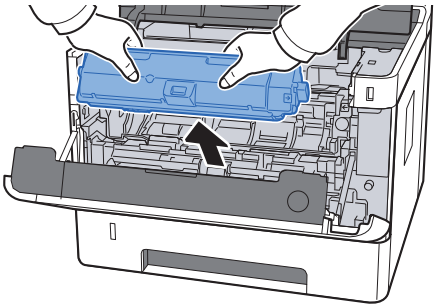

4 **Put used toner containers into the plastic waste bag.**

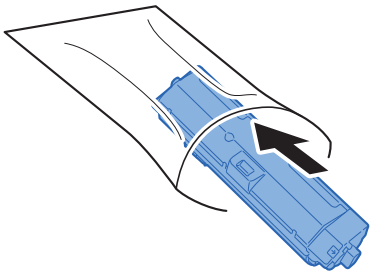

5 Remove the new toner container from the box.

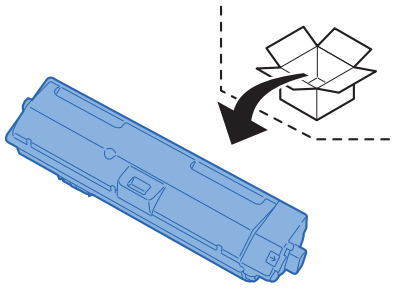

IMPORTANT

Do not touch the points shown below.

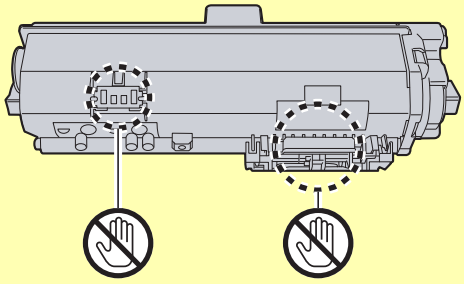

6 Shake the toner container.

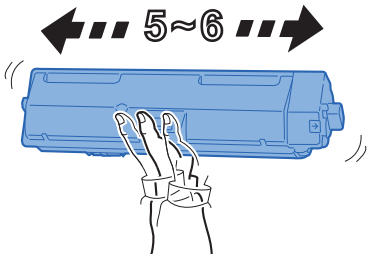

7 Install the toner container.

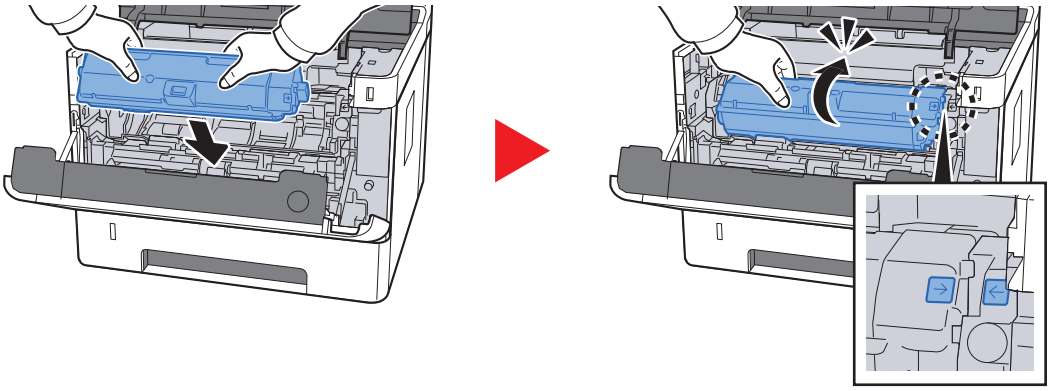

8 Close the front cover.

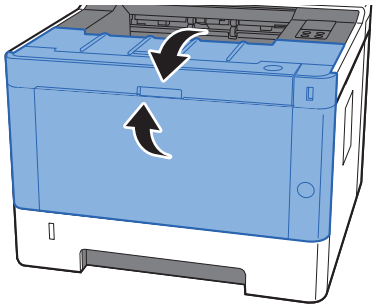

NOTE

- If the front cover does not close, check that the new toner container is installed correctly.
- Return the exhausted toner container to your dealer or service representative. The collected toner container will be recycled or disposed in accordance with the relevant regulations.

Loading Paper

When Cassette # runs out of paper, the [**Paper**] indicator blinks.

Loading in the Cassettes (page 3-4)
Loading Paper in the Multipurpose Tray (page 5-2)

Using the Maintenance Menu

You can use the [**Maintenance Menu**] to adjust the print position, and maximize the print quality for the elevation of your location.

Maintenance Menu User Guide

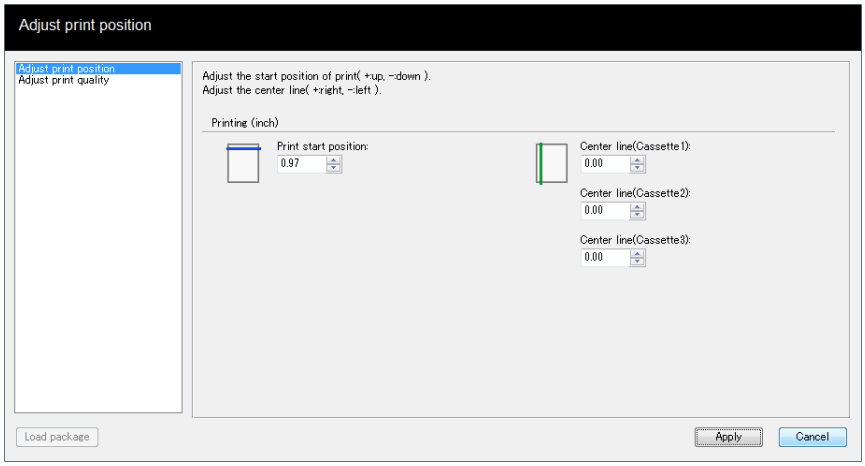

Item		Description
Adjust print position	**Printing start position**	Enter or select the top margin start position for printing. **Value: 0 to 300 mm (in 5 mm increments)**
	Center Line	Enter or select the left margin start position for printing for each available paper source. This setting is available for each cassette when optional paper feeders are installed. **Value: -25 to 25 mm (in 5 mm increments)**
Adjust print quality	**Drum charge setting**	When print quality has deteriorated, the output of the main charger can be changed to restore print quality. **Value: 1 to 7**
	Altitude setting	If you are using the machine at an altitude of 1,000 m or higher and print quality has deteriorated, the Altitude setting can be used to restore print quality. **Value: Normal, 1001 - 2000m, 2001 - 3000m, 3001 - 3500m**
	Drum refresh	Perform Drum refresh when images show streaking with white lines.

Troubleshooting

Solving Malfunctions

The table below provides general guidelines for problem solving.

If a problem occurs with your machine, look into the checkpoints and perform procedures indicated on the following pages. If the problem persists, contact your Service Representative.

NOTE

When contacting us, the serial number will be necessary.
To check the serial number, refer to the following:

Checking the Equipment's Serial Number (page i)

Machine Operation Trouble

When the following machine operation troubles occur, implement appropriate procedures.

Symptom	Checkpoints	Corrective Actions	Reference Page
The screen does not respond when the power switch is turned on.	Check the power cord.	Connect both ends of the power cord securely.	page 2-8
Blank sheets are ejected. 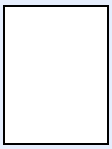	—	Check that the settings of the application software.	—
Paper often jams.	Is the paper loaded correctly?	Load the paper correctly.	page 3-4
	—	Turn the orientation 180 degrees around in which the paper is positioned.	page 3-4
	Is the paper of the supported type? Is it in good condition?	Remove the paper, turn it over, and reload it.	page 3-4
	Is the paper curled, folded or wrinkled?	Replace the paper with new paper.	page 3-4
	Are there any loose scraps or jammed paper in the machine?	Remove any jammed paper.	page 6-28
2 or more sheets are overlaps when ejected. (multi feed) 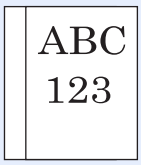	—	Load the paper correctly.	page 3-2
Printouts are wrinkled. 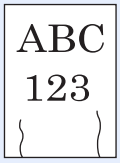	Is the paper loaded correctly?	Load the paper correctly.	page 3-4
	—	Turn the orientation 180 degrees around in which the paper is positioned.	page 3-4
	Is the paper damp?	Replace the paper with new paper.	page 3-4

Symptom	Checkpoints	Corrective Actions	Reference Page
Printouts are curled.	—	Turn the paper over in the cassette, or turn the orientation 180 degrees around in which the paper is positioned.	page 3-2
	Is the paper damp?	Replace the paper with new paper.	page 3-4
I can't install the printer driver.	Are you trying to install the driver using a host name with Wi-Fi or Wi-Fi Direct enabled?	Specify an IP address instead of a host name.	—
Cannot print.	Is the machine plugged in?	Plug the power cord into an AC outlet.	—
	Is the machine powered on?	Turn on the power switch.	page 2-9
	Are the USB cable and network cable connected?	Connect the correct USB cable and network cable securely.	page 2-7
While "Auto-IP" is set to [**On**], the IP address is not assigned automatically.	Is a value other than "0.0.0.0" entered for the IP address of TCP/IP(v4)?	Enter "0.0.0.0" for the IP address of TCP/IP(v4).	page 2-13
The machine is emitting steam in the area around the paper ejection slot.	Check the room temperature to see if it is low, or if damp paper was used.	Depending on the printing environment and the paper's condition, the heat generated during printing will cause the moisture in the paper to evaporate, and the steam emitted may look like smoke. This is not a problem, and you can continue printing. If the steam concerns you, raise the room temperature, or replace the paper with a newer, dryer paper.	—

Printed Image Trouble

When the following printed image trouble occurs, implement appropriate procedures.

Symptom	Checkpoints	Corrective Actions	Reference Page
Printed images are totally too light. 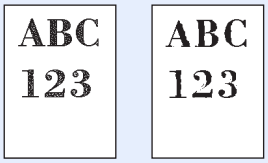	Is the paper damp?	Replace the paper with new paper.	page 3-2
	Have you changed the density?	Select appropriate density level.	page 4-17
	Is the toner distributed evenly within the toner container?	Shake the toner container from side to side several times.	page 6-6
	Is EcoPrint mode enabled?	Disable [**EcoPrint**] mode.	page 4-2
	Are the drum unit and developer unit installed correctly?	Correctly install the drum unit and developer unit.	page 6-2
	—	Make sure the paper type setting is correct for the paper being used.	page 4-17
	—	Select [**Adjust print quality**] in the Maintenance menu, and select [**Refresh**] in [**Drum refresh**].	page 6-10
Printed images are too dark even though the background of the scanned original is white.	—	Select [**Adjust print quality**] in the Maintenance menu, and select [**Refresh**] in [**Drum refresh**].	page 6-10
	—	Select [**Adjust print quality**] in the Maintenance menu and set a higher value for "Drum charge setting". Increase the adjustment value 1 level at a time from the current value. If there is no improvement after the value is increased by 1 level, increase by 1 level again. If there is no improvement, lower in increments of 1 level from the original setting. If there is no improvement after the value is decreased by 1 level, decrease by 1 level again. If there is still no improvement, return the setting to the original value.	page 6-10
Black dots appear on the white background when white original is scanned.	—	Select [**Adjust print quality**] in the Maintenance menu, and select [**Refresh**] in [**Drum refresh**].	page 6-10
	—	Select [**Adjust print quality**] in the Maintenance menu and set a higher value for "Drum charge setting". Increase the adjustment value 1 level at a time from the current value. If there is no improvement after the value is increased by 1 level, increase by 1 level again. If there is still no improvement, return the setting to the original value.	page 6-10

Symptom	Checkpoints	Corrective Actions	Reference Page
Printed images are fuzzy.	Is the device used in an environment with high humidity or where the temperature or humidity changes suddenly?	Use in an environment that has suitable humidity.	—
	—	Select [**Adjust print quality**] in the Maintenance menu, and select [**Refresh**] in [**Drum refresh**].	page 6-10
Printed images are skewed.	Is the paper loaded correctly?	Check the position of the paper width guides.	page 3-4
Irregular horizontal lines appear in the image. 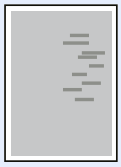	—	Select [**Adjust print quality**] in the Maintenance menu and set a higher value for "Drum charge setting". Increase the adjustment value 1 level at a time from the current value. If there is no improvement after the value is increased by 1 level, increase by 1 level again. If there is still no improvement, return the setting to the original value.	page 6-10
The altitude is 1000 m or higher and irregular horizontal white lines appear in the image. 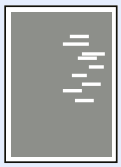	—	Select [**Adjust print quality**] in the Maintenance menu, and set "Altitude adjustment" to one altitude level higher than the current setting.	page 6-10
The altitude is 1000 m or higher and dots appear in the image. 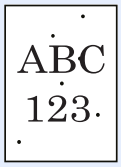	—	Select [**Adjust print quality**] in the Maintenance menu, and set "Altitude adjustment" to one altitude level higher than the current setting.	page 6-10
Dirt on the top edge or back of the paper. 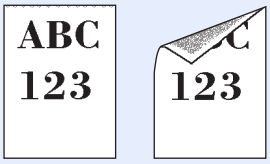	Is the interior of the machine dirty?	Clean the interior of the machine.	page 6-2
	—	Clean the charger inside of the machine.	page 6-2

Symptom	Checkpoints	Corrective Actions	Reference Page
Part of the image is periodically faint or shows white lines. 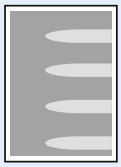	—	Open and then close the front cover.	—
	—	Select [**Adjust print quality**] in the Maintenance menu, and select [**Refresh**] in [**Drum refresh**].	page 6-10
	—	Select [**Adjust print quality**] in the Maintenance menu and set a lower value for "Drum charge setting". Decrease the adjustment value 1 level at a time from the current value. If there is no improvement after the value is decreased by 1 level, decrease by 1 level again. If there is still no improvement, return the setting to the original value.	page 6-10
The previous image remains and lightly printed. 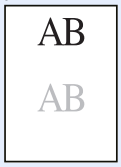	—	Make sure the paper type setting is correct for the paper being used.	page 4-17
	—	Select [**Adjust print quality**] in the Maintenance menu and set a higher value for "Drum charge setting". Increase the adjustment value 1 level at a time from the current value. If there is no improvement after the value is increased by 1 level, increase by 1 level again. If there is still no improvement, return the setting to the original value.	page 6-10

Indicator pattern when an error occurs

When a problem occurs on the machine, the indicator on the operation panel lights in a specific pattern. Problems that can be resolved by the user are described below. If the problem persists, contact your Service Representative.

Maintenance Indication

Indicator		
Meaning	**Corrective Actions**	**Reference Page**
Paper jam.	If a paper jam occurs, the machine will stop. Remove the jammed paper.	page 6-28

Indicator		
Meaning	**Corrective Actions**	**Reference Page**
Front cover is open.	Close the front cover. For details, you can also check the error in the status monitor on your computer.	page 4-11
The developer unit or toner container is not installed.	Install the developer unit or toner container.	page 6-2

Indicator		
Meaning	**Corrective Actions**	**Reference Page**
Toner is empty.	Replace the toner container. For details, you can also check the error in the status monitor on your computer.	page 4-11 page 6-6

NOTE

The indicator lights as follows when toner is being replenished.

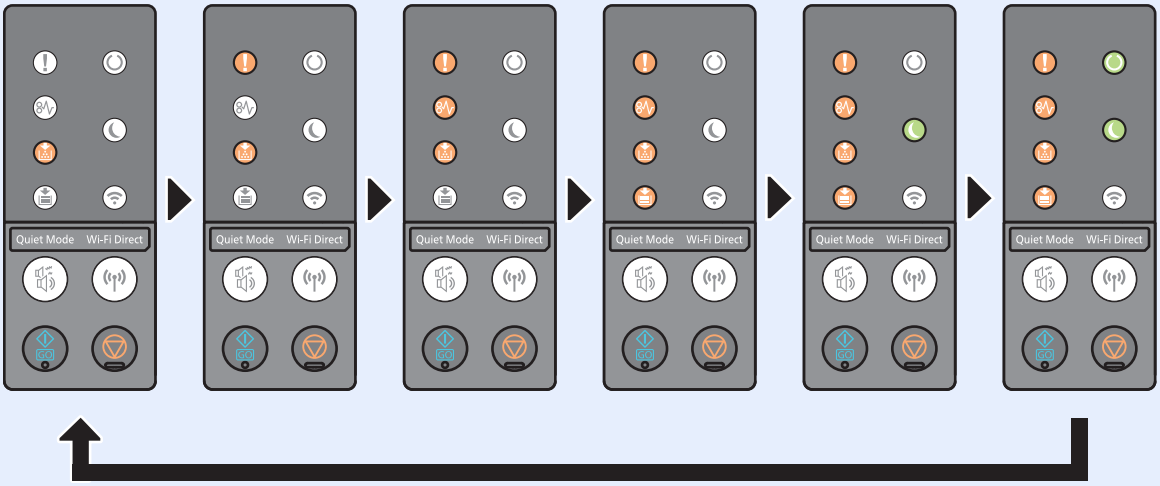

Indicator		
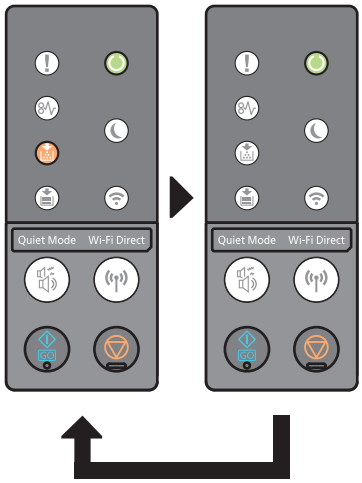		
Meaning	**Corrective Actions**	**Reference Page**
The toner is running low.	It is almost time to replace the toner container. Obtain a new toner container.	—

Indicator		
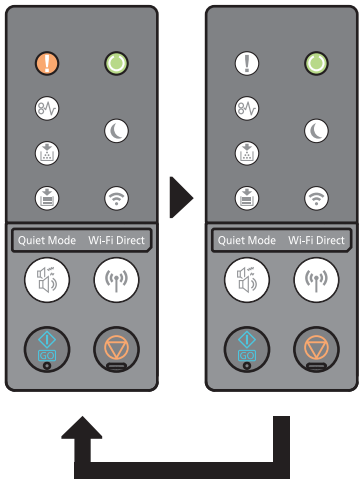		
Meaning	**Corrective Actions**	**Reference Page**
Replace Maintenance Kit.	Replacement of the maintenance kit is necessary at every 100,000 images of printing and requires professional servicing. Contact your Service Representative.	—
Formatting SD Card.	Please wait.	
High temperature.	Adjust the temperature and the humidity of your room.	
Low temperature.		

Indicator		
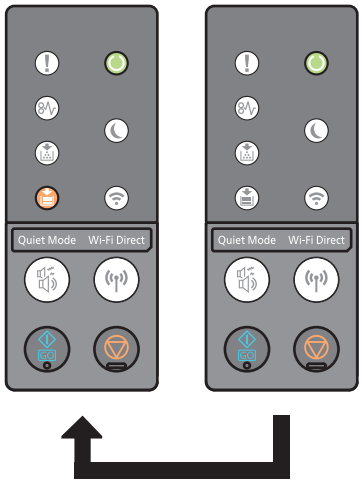		
Meaning	**Corrective Actions**	**Reference Page**
Out of paper.	Add paper to the cassette or multipurpose tray. For details, you can also check the error in the status monitor on your computer.	page 3-2 page 4-11

Indicator		
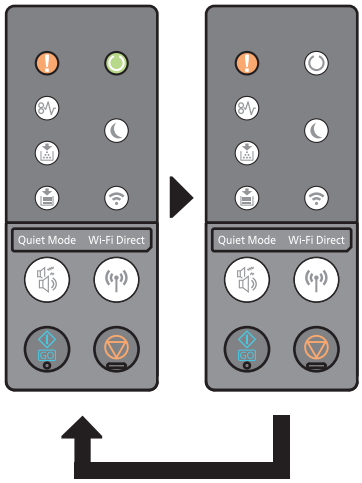		
Meaning	**Corrective Actions**	**Reference Page**
Memory is full.	Unable to continue the job as the memory is used up. Select [**GO**] key to print the scanned pages. The print job cannot be processed completely. To cancel a job, press and hold the [**Cancel**] key.	—
KPDL error.	PostScript error has occurred. The job is canceled. Select [**GO**] key.	
SD card error.	An error has occurred on the SD card. Job is canceled. Select [**GO**] key.	
USB memory error.	An error occurred in the removable memory. The job stopped. Select [**GO**] key.	
Cannot duplex print on this paper.	Cannot duplex print on this paper. The job stopped. Select [**GO**] key.	
Multiple copies cannot be printed.	Insufficient printer memory. Multiple copies cannot be printed. Select the [**GO**] key. Only one copy is available. To print, remove the checkmarks from [**RAM Disk**] and [**SD Card**] on the "Device Settings" tab of the printer properties, or insert an SD card and turn off the machine's RAM Disk Mode.	
Print overrun.	The job has been paused because print processing is taking a long time. To resume printing, select the [**GO**] key. To cancel the job, press and hold the [**Cancel**] key.	

Indicator		
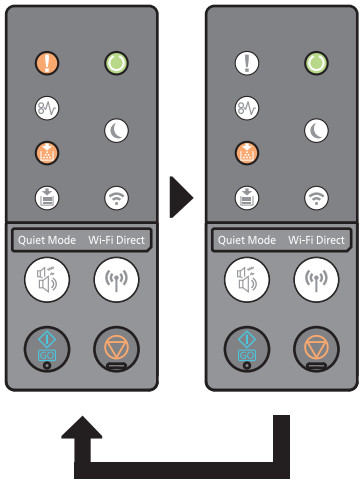		
Meaning	**Corrective Actions**	**Reference Page**
Waste toner near full.	The waste toner container will soon be full. Contact your service representative.	—

Indicator		
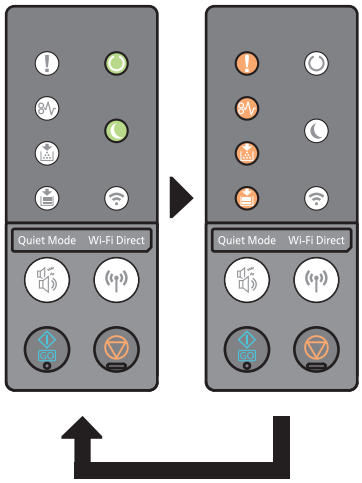		
Meaning	**Corrective Actions**	**Reference Page**
Toner other than genuine toner has been installed.	We cannot bear any responsibility for failures that occur due to the use of non-genuine supplies (non-specified toner). To continue using the installed toner container, simultaneously press the [**GO**] key and [**Cancel**] key for 3 seconds or longer.	—

Indicator		
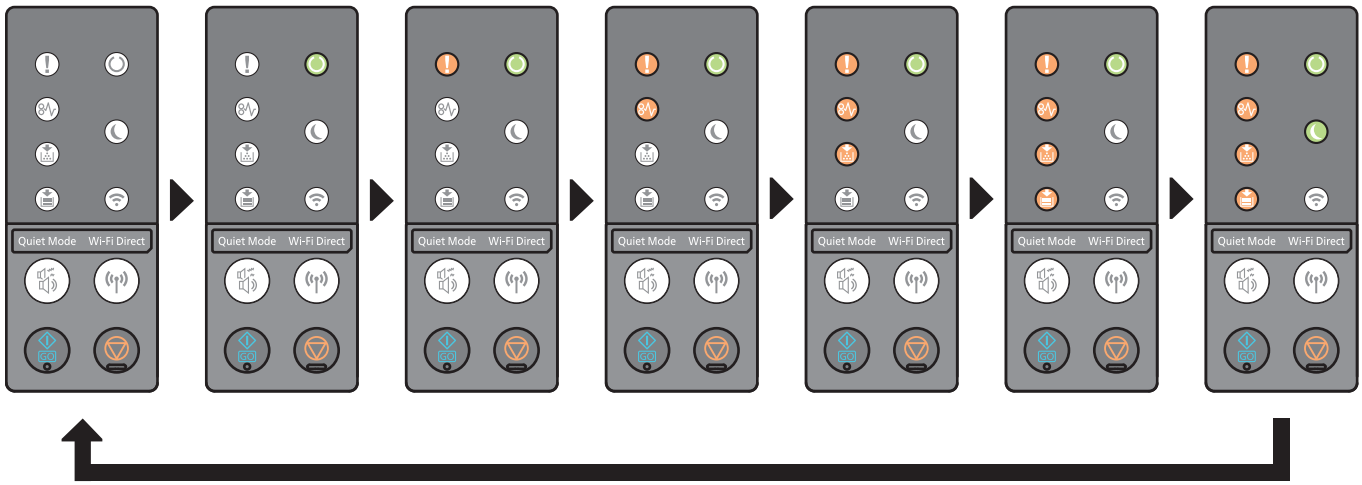		
Meaning	**Corrective Actions**	**Reference Page**
Restarting.	Please wait.	—
Cooling…		
The machine is under the adjustment to maintain its quality.		
Starting the update.		
Performing Drum Refresh...		
Downloading the firmware from the network.		

Indicator		
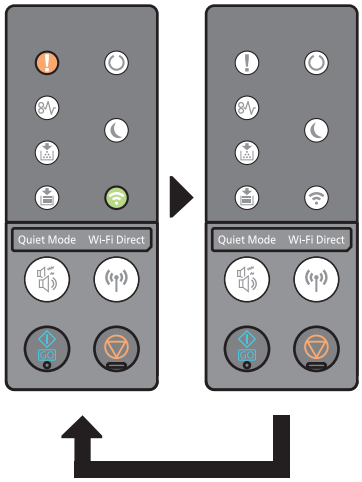		
Meaning	**Corrective Actions**	**Reference Page**
Failed to establish the Wi-Fi connection.	Check the settings and wireless communication conditions.	page 2-15
Access point was not detected.	Check if the access point has been set correctly.	

Indicator		
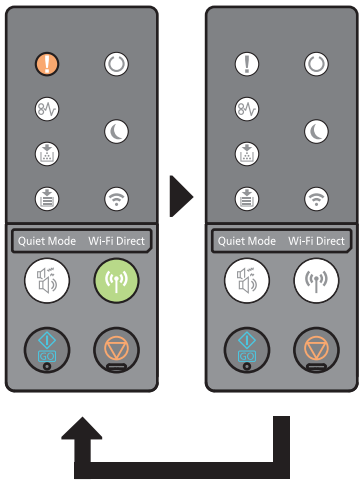		
Meaning	**Corrective Actions**	**Reference Page**
Failed to establish the Wi-Fi Direct connection.	Check the settings and wireless communication conditions.	page 2-20
Connection limit exceeded.	Cancel a connection to a portable device that is not being used, or set the machine's auto disconnect time to break portable device connections.	—

Indicator		
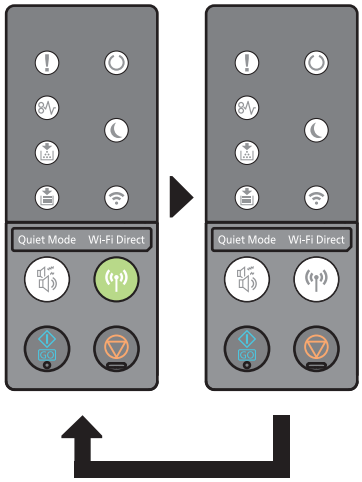		
Meaning	**Corrective Actions**	**Reference Page**
Register in Wi-Fi Direct?	This appears when the machine receives a Wi-Fi Direct device registration request. Select the [**GO**] key or [**Wi-Fi Direct**] key to register the machine as a Wi-Fi Direct device. To cancel device registration, select the [**Cancel**] key.	—

Indicator		
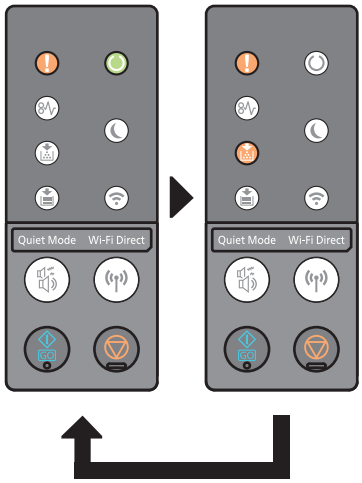		
Meaning	**Corrective Actions**	**Reference Page**
The regional specification of toner container does not match that of the machine.	Install the specified toner container.	—

Indicator		
Meaning	**Corrective Actions**	**Reference Page**
The machine ran out of paper during printing.	Add paper to the cassette or multipurpose tray. For details, you can also check the error in the status monitor on your computer.	page 3-4 page 4-11

Indicator		
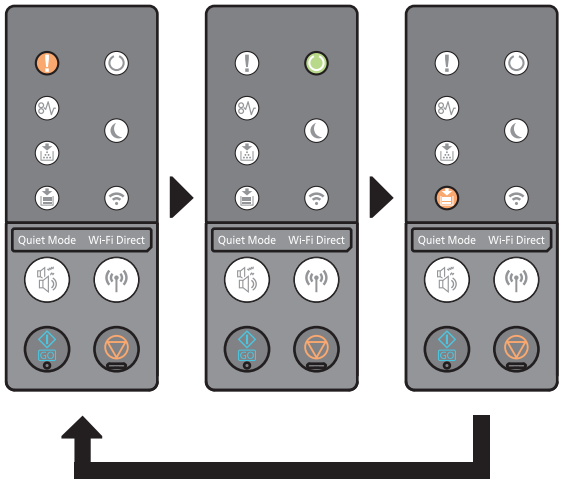		
Meaning	**Corrective Actions**	**Reference Page**
Register with Google Cloud Print?	The message is displayed when the printer receives the register request for Google Cloud Print. Press and hold the [**GO**] key to register the printer as a Google Cloud Print device. Press and hold the [**Cancel**] key to cancel the registration.	—

Error Indication

If the indicator pattern is not one of the patterns in the table above, an error that requires repair may have occurred. Turn off the power, unplug the power cord, and then plug the power cord back in and turn on the power. This may clear the error. If the error is not cleared, contact your service technician.

Error Code

The error code is displayed as follows. Check the error code as described below and provide the error code when contacting us.

Number / Indicator	Indicator pattern									
	0	1	2	3	4	5	6	7	8	9
		●		●		●		●		●
			●	●			●	●		
					●	●	●	●		
									●	●

Alphabet / Indicator	Indicator pattern					
	A	B	C	D	E	F
		●		●		●
	●	●			●	●
			●	●	●	●
	●	●	●	●	●	●

Example:

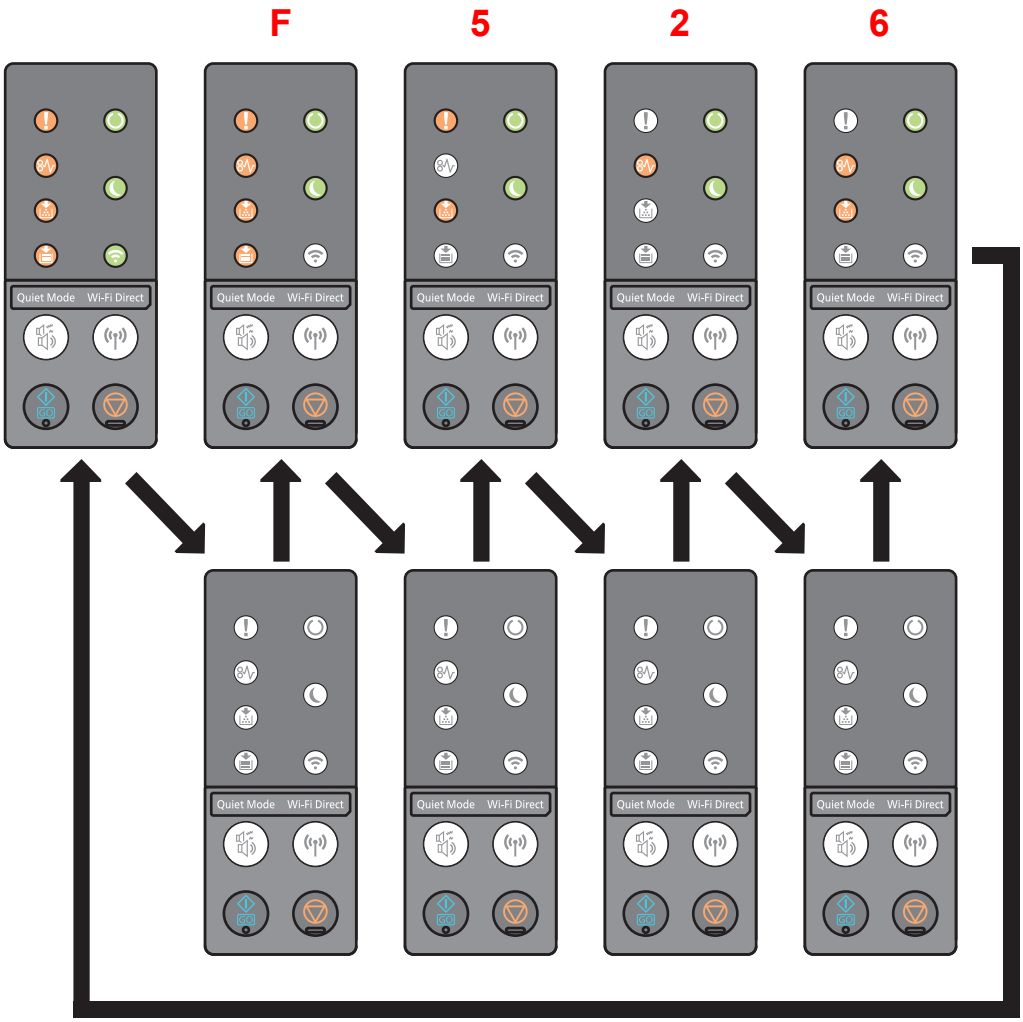

Clearing Paper Jams

If a paper jam occurs, the [**JAM**] indicator lights and the machine will stop.

Refer to these procedures to remove the jammed paper.

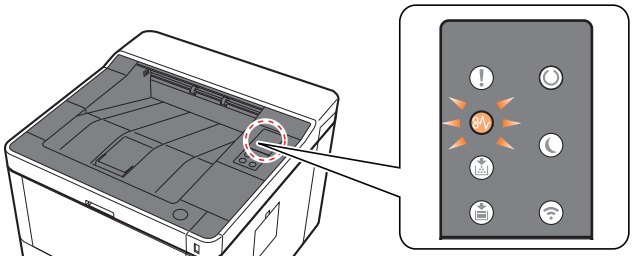

Paper Jam Location	Reference Page
Multipurpose Tray	page 6-29
Cassettes 1 (to 3)	page 6-30 page 6-32 page 6-34
Rear Cover	page 6-36
Inside of the Machine	page 6-40

Remove any jammed paper in the Multipurpose Tray

CAUTION

- **Do not reuse jammed papers.**
- **If the paper tears during removal, be sure to remove any loose scraps of paper from inside the machine. Scraps of paper left in the machine could cause subsequent jamming.**

1 **Remove any jammed paper.**

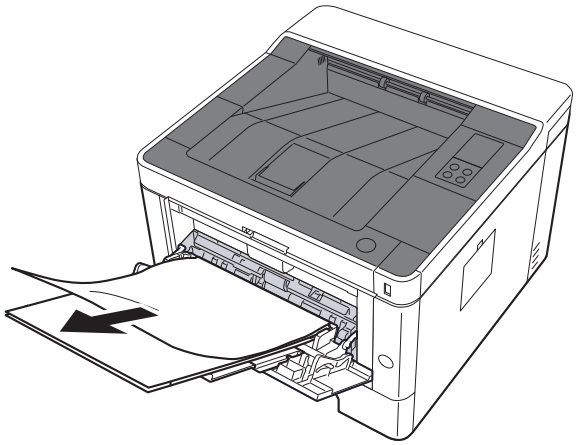

2 **Remove all the paper.**

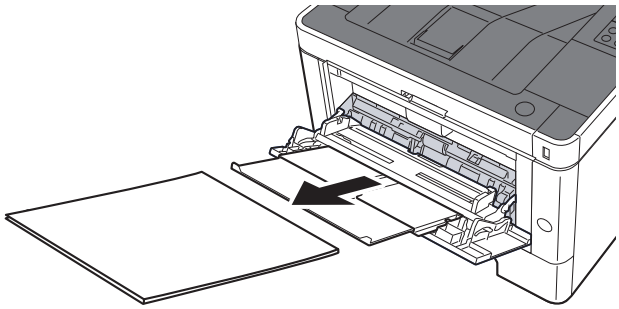

3 **Reload the paper.**

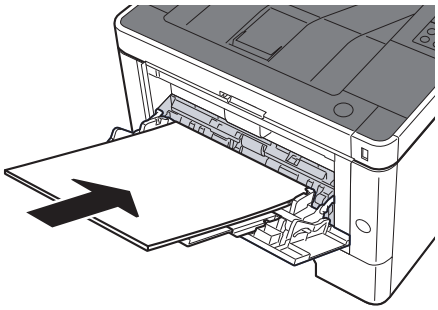

Remove any jammed paper in Cassette 1

CAUTION

- **Do not reuse jammed papers.**
- **If the paper tears during removal, be sure to remove any loose scraps of paper from inside the machine. Scraps of paper left in the machine could cause subsequent jamming.**

1 **Pull Cassette 1 out toward you until it stops.**

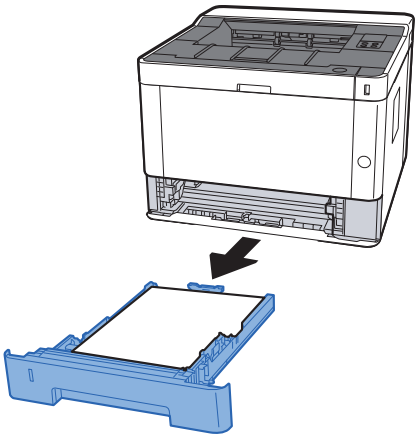

2 **Remove any jammed paper.**

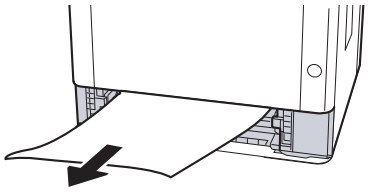

3 **Push Cassette 1 back in.**

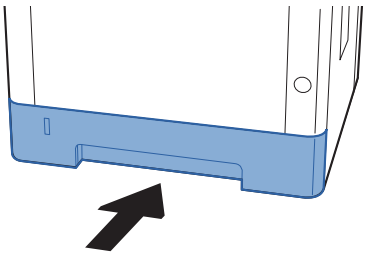

4 Open the front cover.

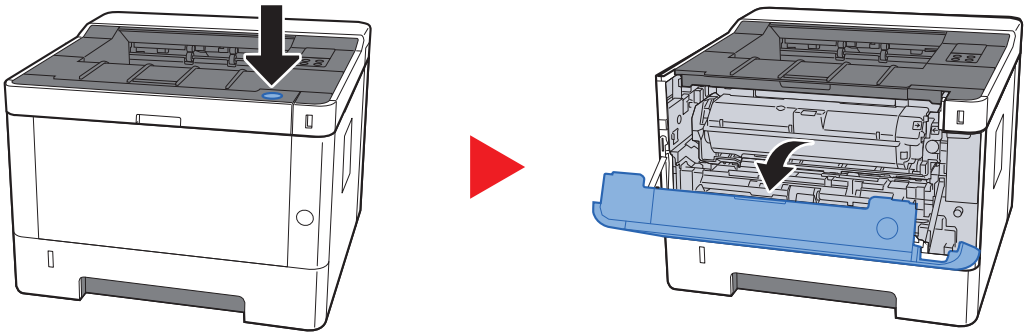

5 Close the front cover.

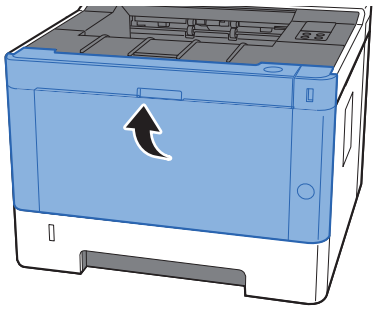

Remove any jammed paper in Cassette 2

CAUTION

- **Do not reuse jammed papers.**
- **If the paper tears during removal, be sure to remove any loose scraps of paper from inside the machine. Scraps of paper left in the machine could cause subsequent jamming.**

1 **Pull Cassette 2 out toward you until it stops.**

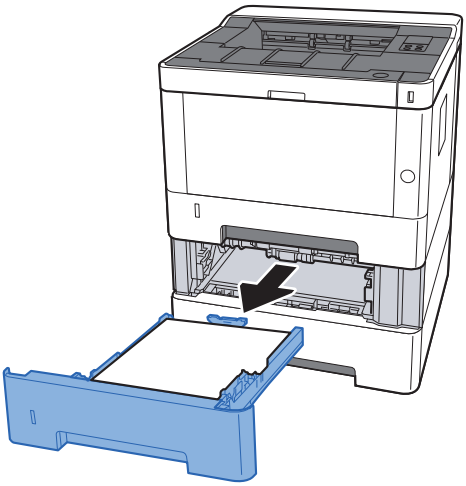

2 **Remove any jammed paper.**

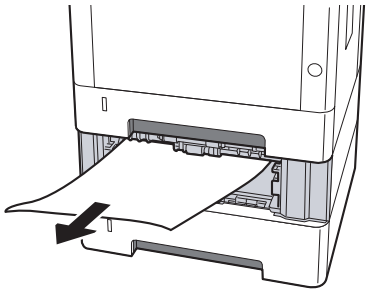

3 **Push Cassette 2 back in.**

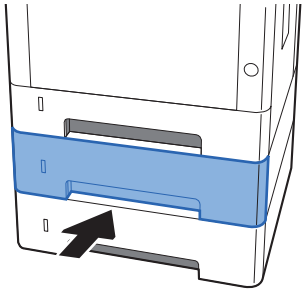

4 Open the front cover.

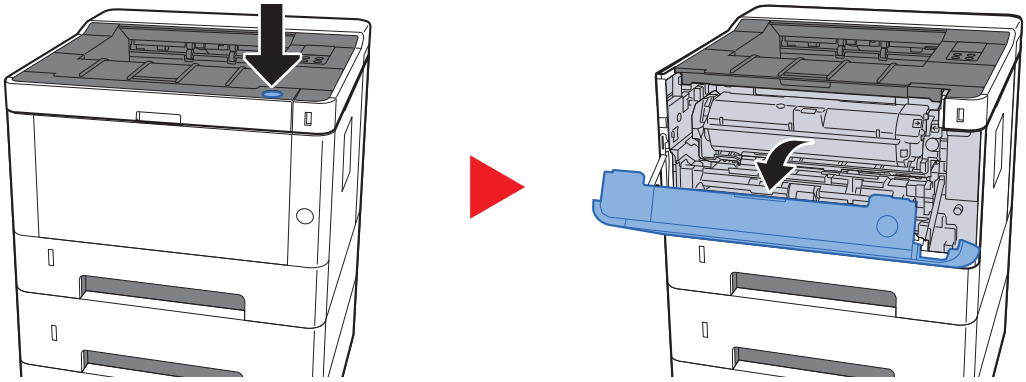

5 Close the front cover.

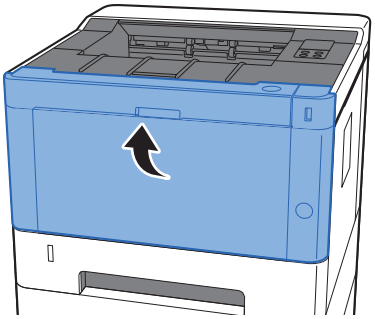

Remove any jammed paper in Cassette 3

CAUTION

- **Do not reuse jammed papers.**
- **If the paper tears during removal, be sure to remove any loose scraps of paper from inside the machine. Scraps of paper left in the machine could cause subsequent jamming.**

1 **Pull Cassette 3 out toward you until it stops.**

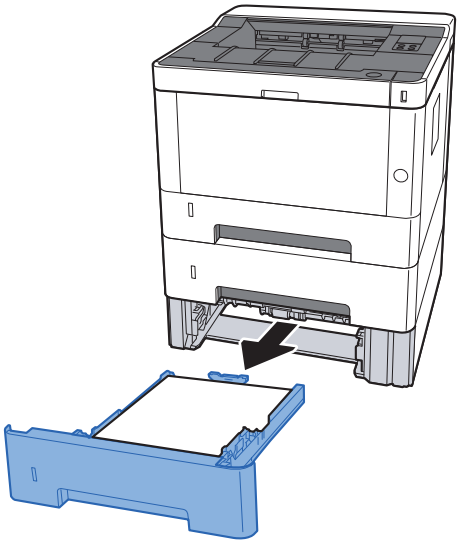

2 **Remove any jammed paper.**

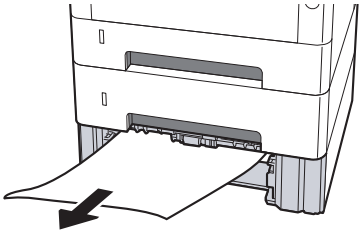

3 **Push Cassette 3 back in.**

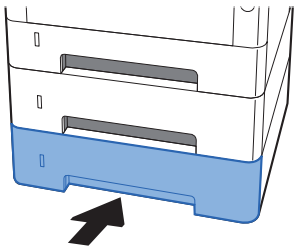

4 Open the front cover.

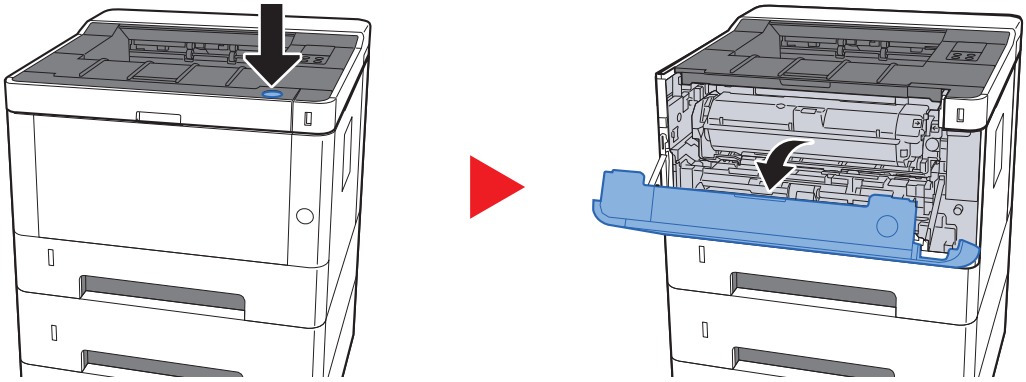

5 Close the front cover.

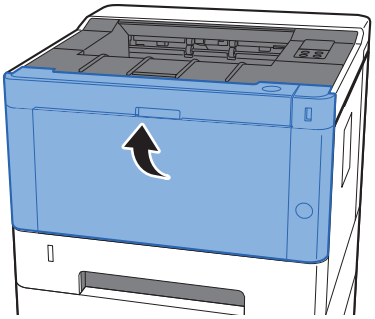

Remove any jammed paper in Rear Cover

CAUTION

The fixing unit is extremely hot. Take sufficient care when working in this area, as there is a danger of getting burned.

1 Open Rear Cover.

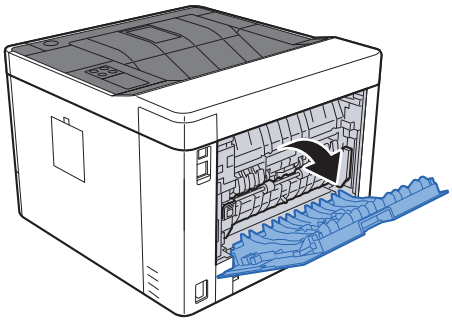

2 Remove any jammed paper.

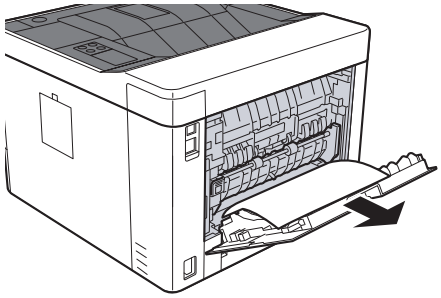

3 Open the feed cover (D).

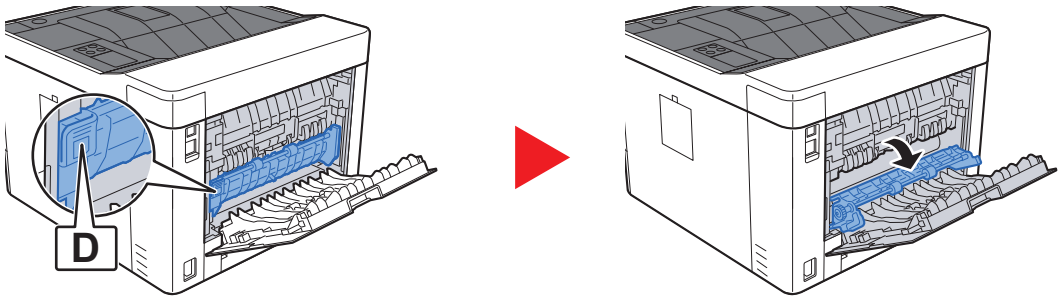

4 Remove any jammed paper.

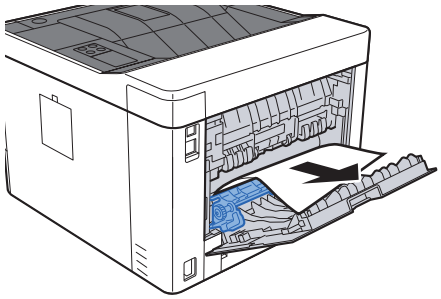

5 Pull Cassette 1 out toward you until it stops.

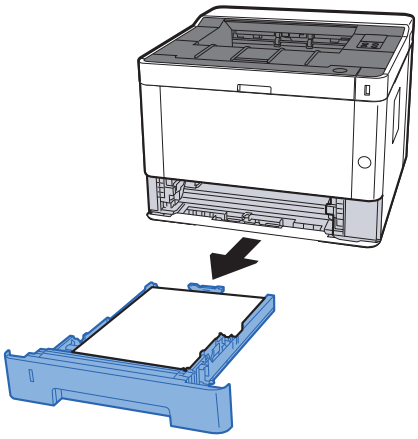

6 Open Feed Cover.

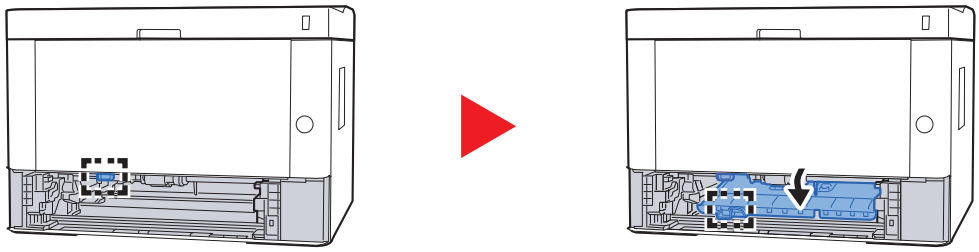

7 Remove any jammed paper.

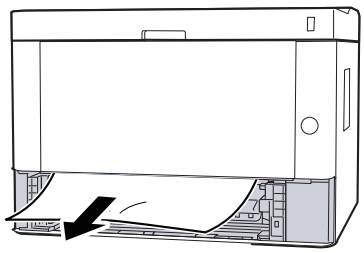

8 Push Feed Cover back in.

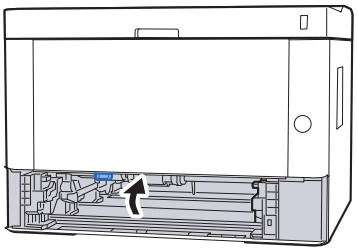

9 Push Cassette 1 back in.

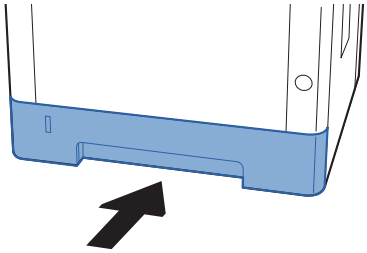

10 Push Rear Cover.

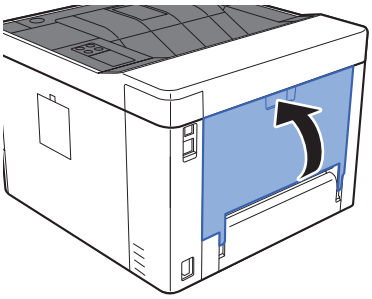

11 Open the front cover.

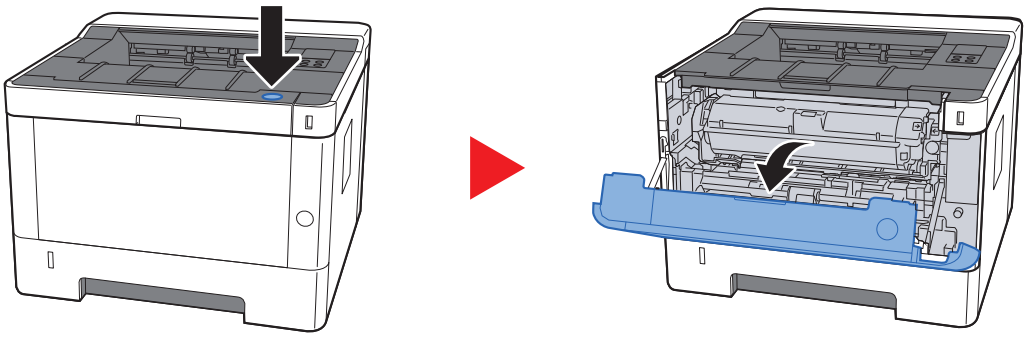

12 Close the front cover.

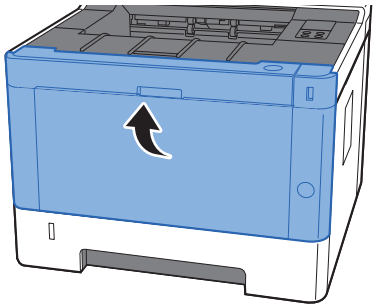

Remove any jammed paper inside of the Machine

CAUTION

- **Do not reuse jammed papers.**
- **If the paper tears during removal, be sure to remove any loose scraps of paper from inside the machine. Scraps of paper left in the machine could cause subsequent jamming.**

1 **Pull Cassette 1 out toward you until it stops.**

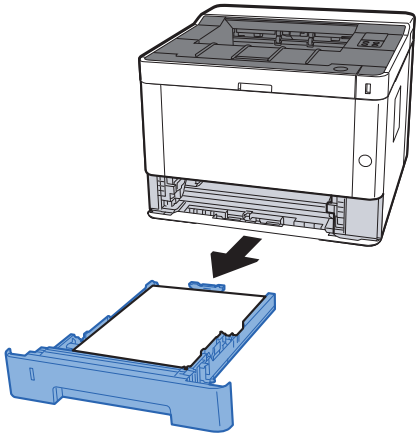

2 **Remove any jammed paper.**

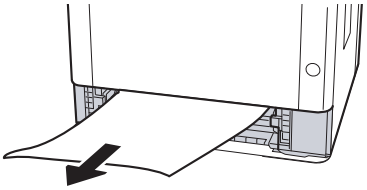

3 **Push Cassette 1 back in.**

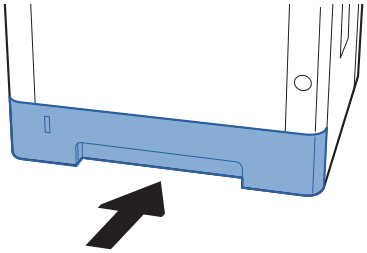

4 Open the front cover.

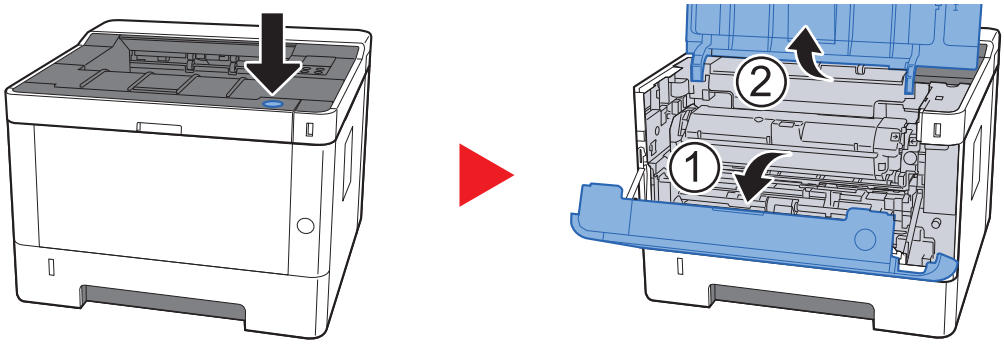

5 Lift the developer unit together with the toner container out of the machine.

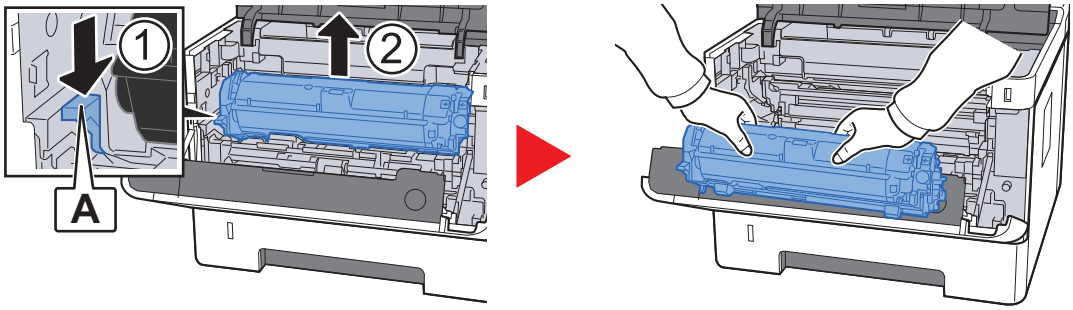

IMPORTANT

Do not touch the developer roller or subject the developer roller to shock. Print quality will be degraded.

6 Place the developer unit together with the toner container flat on a clean, level surface.

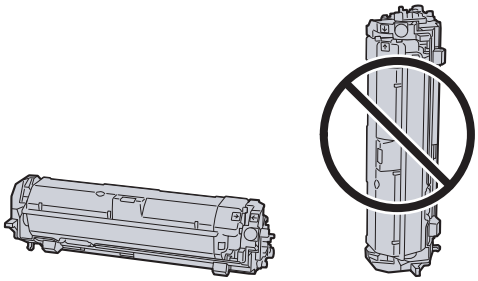

IMPORTANT

Do not place the developer unit together with the toner container on end.

7 Remove the drum unit from the machine.

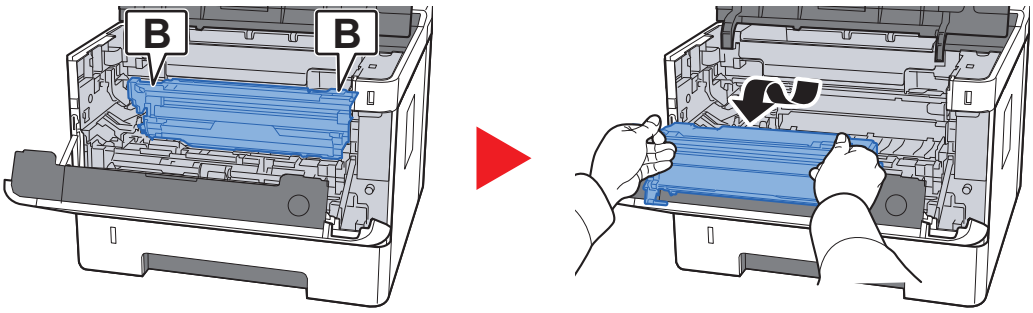

IMPORTANT

- **The fuser unit inside the machine is hot. Do not touch it, as it may result in burn injury.**
- **Do not touch the drum or subject the drum to shock. Print quality will be degraded if the drum is exposed to direct sunlight or intense light.**

8 Place the drum unit flat on a clean, level surface.

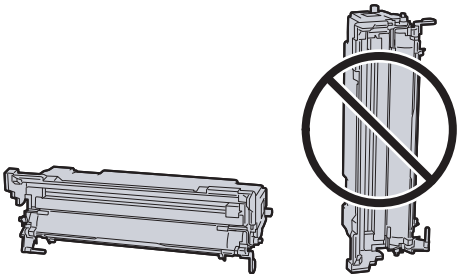

IMPORTANT

Do not place the drum unit on end.

9 Open Feed Cover (C).

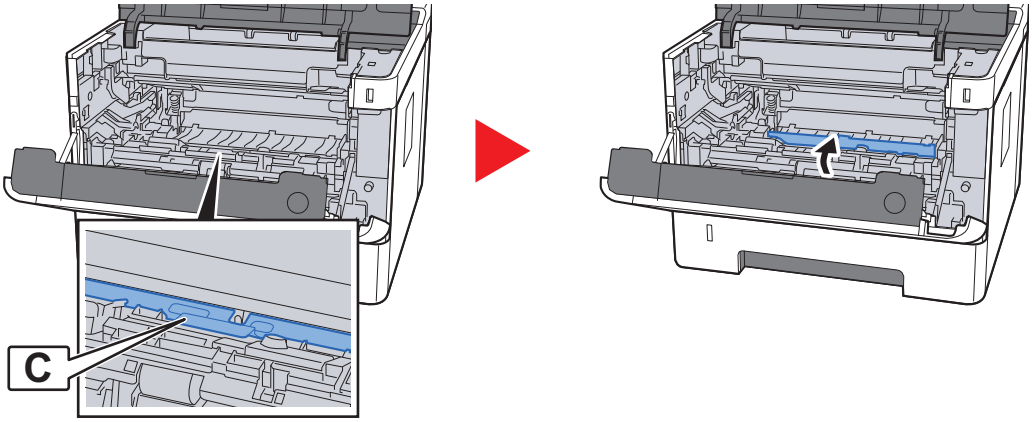

10 **Remove any jammed paper.**

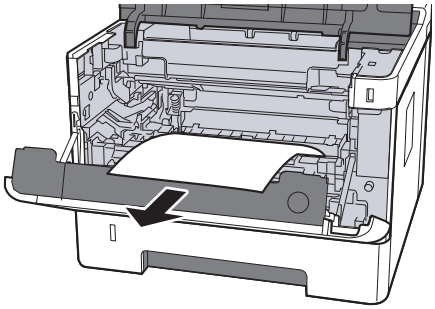

11 **Push Feed Cover back in.**

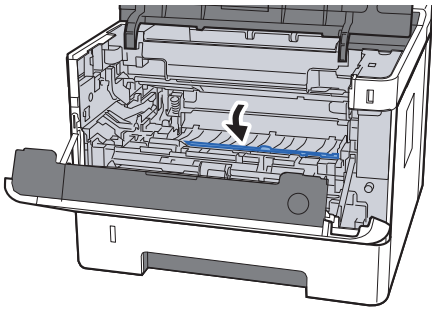

12 **Return the drum unit to the original position.**

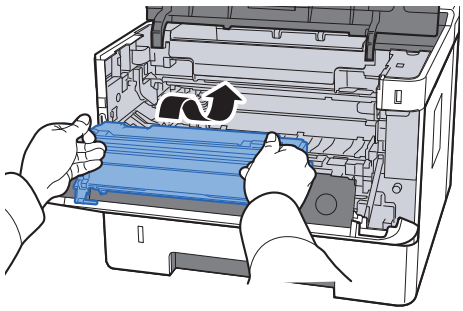

13 **Return the developer unit together with the toner container to its position, aligning the guides at both ends with the slots in the machine.**

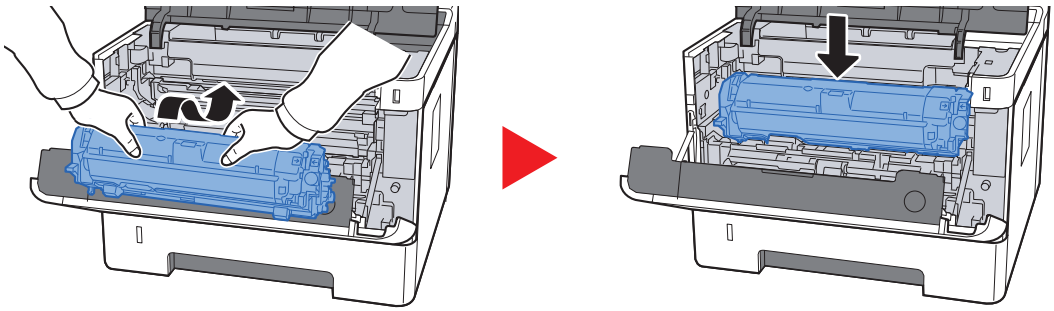

14 Close the front cover.

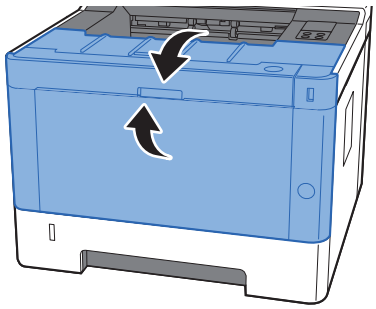

7 Appendix

This chapter explains the following topics:

Optional Equipment 7-2
Overview of Optional Equipment 7-2
Paper 7-5
Basic Paper Specifications 7-5
Choosing the Appropriate Paper 7-6
Special Paper 7-9
Specifications 7-13
Machine 7-13
Printer Functions 7-15
Paper Feeder 7-16
Glossary 7-17

Optional Equipment

Overview of Optional Equipment

The following optional equipment is available for the machine.

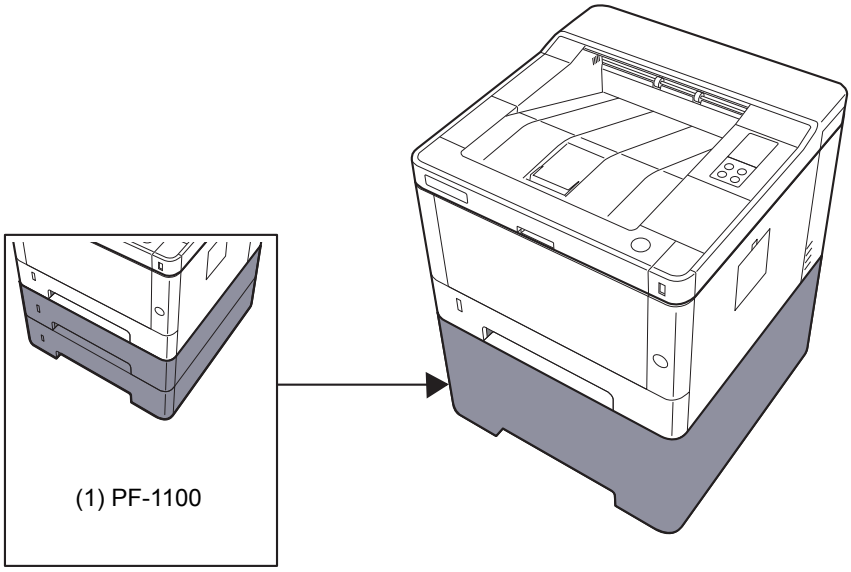

Software option
(2) UG-33

(3) SD/SDHC Memory Card

(1) PF-1100 "Paper Feeder"

The paper feeder can be installed in the machine.

Loading in the Cassettes (page 3-4)

(2) UG-33 "ThinPrint Option"

This application allows print data to be printed directly without a print driver.

(3) "SD/SDHC Memory Card"

An SD/SDHC memory card is useful for storing fonts, macros, and overlays. The machine is equipped with a slot for an SDHC memory card with a maximum size of 32 GB, and an SD memory card with a maximum size of 2 GB.

IMPORTANT

Unencrypted data is saved on the SD/SDHC memory card.
Exercise caution when saving sensitive documents.

Reading the SD/SDHC Memory Card

Once inserted in the machine's slot, the contents of the SD/SDHC memory card can be read from the operation panel or automatically when you power on or reset the machine.

Installing and Formatting the SD/SDHC Memory Card

To use an unused SD/SDHC memory card, you must first use the machine to format the SD/SDHC memory card.

1. Power off the machine and unplug the power cord.
2. Remove the cover.

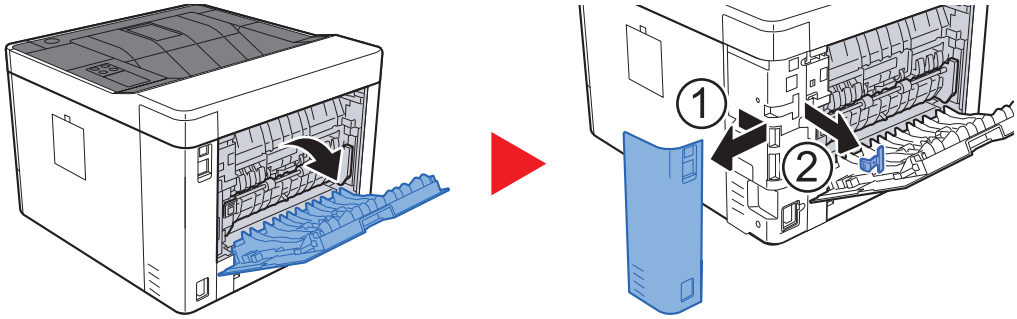

3. Insert the SD/SDHC memory card into the SD/SDHC memory card slot.

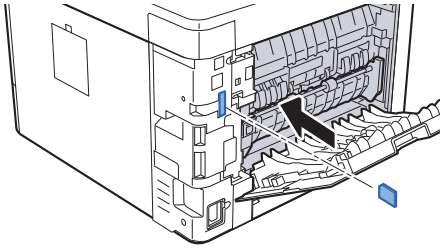

4 Replace the covers.

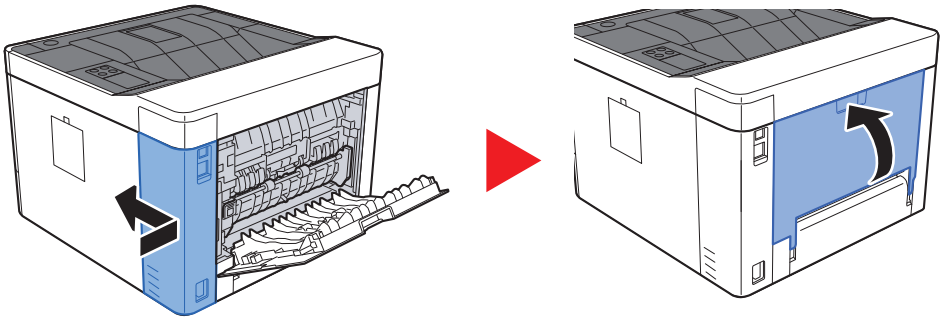

Paper

This section explains the paper sizes and types that can be used in the paper source.

For details on the sizes, types, and number of sheets of paper that can be loaded in each paper tray, refer to the following:

Specifications (page 7-13)

Basic Paper Specifications

This machine is designed to print on standard copy paper as used in regular ('dry') copiers and page printers such as laser printers. It also supports a variety of other types of paper that conform to the specifications given in this appendix.

Be careful when choosing paper. Paper unsuitable for the machine may cause jams or may be wrinkled.

Supported Paper

Use standard copy paper for regular copiers or laser printers. The printing quality will be affected by the quality of paper. Poor quality paper may result in unsatisfactory output.

Basic Paper Specifications that can be Used with This Machine

The following table lists the specifications of paper that is supported with this machine. Refer to the subsequent sections for further details.

Criteria	Specifications
Weight	Cassettes: 60 to 163 g/m^2
	Multipurpose Tray: 60 to 220 g/m^2, 209 g/m^2 (Cardstock)
Dimensional accuracy	±0.7 mm
Squareness of corners	90° ±0.2°
Moisture content	4 to 6%
Pulp content	80% or more

NOTE

Some recycled paper does not meet requirements for use with this machine as listed in the Basic Paper Specifications shown below, such as moisture or pulp content. For this reason, we recommend purchasing a small amount of recycled paper as a sample for testing prior to use. Choose recycled paper that gives the best printing results and contains low levels of paper dust.

We are not responsible for the problems occurred from the use of paper that does not conform to our specifications.

Choosing the Appropriate Paper

This section describes guidelines for choosing paper.

Condition

Avoid using paper with bent corners or that is curled, dirty, or torn. Do not use paper that has a rough surface or paper fiber lint, or that is especially delicate. Use of paper in any of these conditions will not only deliver poor copies but may also cause jams and shorten the useful life of the machine. Choose paper with a smooth and even surface; however, avoid coated paper or paper with a treated surface as it may damage the drum or fusing unit.

Ingredients

Do not use paper such as paper that has been coated or surface-treated or paper that contains plastic or carbon. Those types of paper may produce harmful fumes from the heat of printing and may damage the drum.

Be sure to use the standard paper that contains at least 80% pulp, i.e., not more than 20% of the total paper content consists of cotton or other fibers.

Smoothness

The paper surface should be smooth, but it must be uncoated. With paper that is too smooth and slippery, several sheets may accidentally be supplied at once, causing jams.

Basis Weight

In countries that use the metric system, basis weight is the weight in grams of one sheet of paper one square meter in area. In the United States, basis weight is the weight in pounds of one ream (500 sheets) of paper cut to the standard size (or trade size) for a specific grade of paper. Paper that is too heavy or too light may be supplied incorrectly or cause paper jams, which may cause excessive wear of the machine. Mixed paper weight (i.e., thickness) may cause several sheets to be supplied at once accidentally and may also cause blurring or other printing problems if the toner fails to adhere correctly.

Moisture Content

Paper moisture content is the ratio of moisture to dryness expressed as a percentage. Moisture affects how the paper is supplied, the electrostatic chargeability of the paper, and how the toner adheres.

Paper moisture content varies depending on the relative humidity in the room. High relative humidity causes paper to become damp, making the edges expand so it appears wavy. Low relative humidity causes paper to lose moisture, making the edges tighten and weakening print contrast.

Wavy or tight edges may cause the paper to slip when it is supplied. Try to keep the moisture content between 4 to 6%.

To maintain the right level of moisture content, bear in mind the following considerations.

- Store paper in a cool, well-ventilated place.
- Store paper flat and unopened in the package. Once the package is opened, reseal it if the paper is not to be used for a while.
- Store paper sealed in the original package and box. Put a pallet under the carton to keep it raised above the floor. Especially during rainy seasons keep the paper a sufficient distance away from wooden or concrete floors.
- Before using paper that has been stored, keep it at the proper moisture level for at least 48 hours.
- Do not store paper where it is exposed to heat, sunlight, or dampness.

Other Paper Specifications

Porosity: The density of the paper fibers.

Stiffness: Paper must be stiff enough or it may buckle in the machine, causing jams.

Curl: Most paper naturally tends to curl after the package is opened. When paper passes through the fixing unit, it curls upward slightly. To deliver flat printouts, load the paper so that the curl faces towards the bottom of the paper tray.

Static electricity: During printing, paper is electrostatically charged so that the toner adheres. Choose paper that can be discharged quickly so that copies do not cling together.

Whiteness: Paper whiteness affects print contrast. Use whiter paper for sharper, brighter copies.

Quality: Machine problems may occur if sheet sizes are not uniform or if corners are not square, edges are rough, sheets are uncut, or edges or corners are crushed. In order to prevent these problems, be especially careful when you cut the paper yourself.

Packaging: Choose paper that is properly packaged and stacked in boxes. Ideally, the packaging itself should have been treated with a coating to inhibit moisture.

Specially treated paper: We do not recommend printing onto the following types of paper, even if it conforms to the basic specifications. When you use these kinds of paper, purchase a small amount first as a sample to test.

- Glossy paper
- Watermarked paper
- Paper with an uneven surface
- Perforated paper

Paper Sizes that can be Used with This Machine

Paper of the following sizes is supported by the machine.

Measurements in the table take into account a ±0.7 mm dimensional accuracy for length and width. Corner angles must be 90° ± 0.2°.

Multipurpose Tray

- B6 (182 × 128 mm)
- Hagaki (Cardstock) (100 × 148 mm)
- Oufuku hagaki (Return postcard) (148 × 200 mm)
- Envelope Monarch (3-7/8 × 7-1/2")
- Envelope #10 (4-1/8 × 9-1/2")
- Envelope DL (110 × 220 mm)
- Envelope C5 (162 × 229 mm)
- Envelope #9 (3-7/8 × 8-7/8")
- Envelope #6 3/4 (3-5/8 × 6-1/2")
- Youkei 4 (105 × 235 mm)
- Youkei 2 (114 × 162 mm)
- Custom (70 × 148 to 216 × 356 mm)

Cassettes or Multipurpose Tray

- Executive (7-1/4 × 10-1/2")
- Letter
- Legal
- A4 (297 × 210 mm)
- B5 (257 × 182 mm)
- A5-R (148 × 210 mm)
- A5 (210 × 148 mm)
- A6 (148 × 105 mm)
- B5(ISO) (176 × 250 mm)
- Oficio II
- 216 × 340 mm
- 16K (273 × 197 mm)
- Statement
- Folio (210 × 330 mm)
- Custom (Cassette: 105 × 148 to 216 × 356 mm, Multipurpose Tray: 70 × 148 to 216 × 356 mm)

Special Paper

This section describes printing onto special paper and print media.

Special Paper that can be Used with This Machine

- Transparencies
- Preprinted paper
- Bond paper
- Recycled paper
- Vellum
- Thin paper
- Letterhead
- Colored paper
- Prepunched paper
- Envelopes
- Hagaki (Cardstock)
- Thick paper
- Labels
- High-quality paper

When using these paper and media, choose those that are designed specifically for copiers or page printers (such as laser printers). Use the multipurpose tray for transparencies, vellum, thin paper, envelopes, cardstocks and label paper.

Choosing Special Paper

Although special paper that meets the following requirements can be used with the machine, print quality will vary considerably due to differences in the construction and quality of special paper. Thus, special paper is more likely than regular paper to cause printing problems. Before purchasing special paper in volume, try testing a sample to ensure the print quality is satisfactory. General precautions when printing onto special paper are given below. Note that we are not responsible for any harm to the user or damage to the machine caused by moisture or specifications of special paper.

Select a cassette or multipurpose tray for special paper.

Transparencies

Transparencies must be able to withstand the heat of printing. Transparencies must meet the following conditions.

Heat resistance	Must withstand at least 190°C
Thickness	0.100 to 0.110 mm
Material	Polyester
Dimensional accuracy	±0.7 mm
Squareness of corners	90° ±0.2°

To avoid problems, use the multipurpose tray for transparencies and load transparencies with the long side facing the machine.

If transparencies jam frequently at output, try pulling the leading edge of sheets gently as they are ejected.

Label

Be sure to feed labels from the multipurpose tray.

For selecting labels, use extreme care so that the adhesive may not come in direct contact with any part of the machine and that the labels are not easily peeled from the carrier sheet. Adhesives that stick to the drum or rollers and peeled labels remaining in the machine may cause a failure.

When printing onto labels, you must be liable for the print quality and possible trouble.

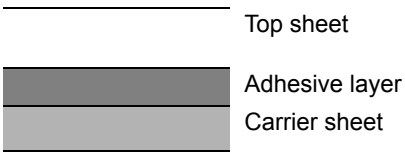

Labels consist of three layers as shown in the illustration. The adhesive layer contains materials that are easily affected by the force applied in the machine. The carrier sheet bears the top sheet until the label is used. This composition of labels may cause more problems.

The label surface must be covered completely with the top sheet. Gaps between labels may cause peeling of labels, resulting in a serious failure.

Some label paper has large margins on the top sheet. When using such paper, do not peel these margins from the carrier sheet before completing output.

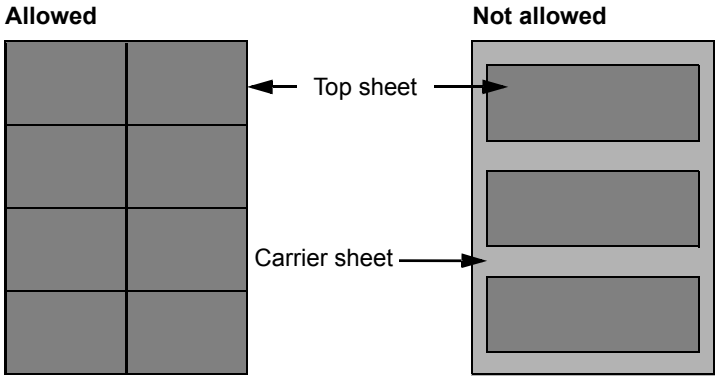

Use label paper that conforms to the following specifications.

Top sheet weight	44 to 74 g/m²
Basis weight (overall paper weight)	104 to 151 g/m²
Top sheet thickness	0.086 to 0.107 mm
Overall paper thickness	0.115 to 0.145 mm
Moisture content	4 to 6 % (composite)

Hagaki (Cardstock)

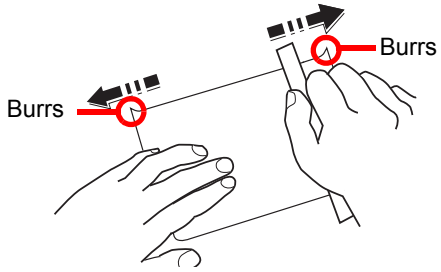

Before loading Hagaki (Cardstock) into the multipurpose tray, fan them and align the edges. If the Hagaki (Cardstock) paper is curled, straighten it before loading. Printing onto curled Hagaki (Cardstock) may cause jams.

Use unfolded Oufuku hagaki (Return postcard) (available at post offices). Some Hagaki (Cardstock) may still have rough edges developed by a paper cutter on the back side. Remove any such rough edges by placing the Hagaki (Cardstock) on a flat surface and rubbing the edges gently a few times with a ruler.

Envelopes

Use the multipurpose tray for envelopes.

Due to the structure of envelopes, printing evenly over the entire surface may not be possible in some cases. Thin envelopes in particular may be wrinkled by the machine in some cases as they pass through. Before purchasing envelopes in volume, try testing a sample to ensure the print quality.

Storing envelopes for a long period may cause them to become wrinkled. Thus, keep the package sealed until you are ready to use them.

Keep the following points in mind.

- Do not use envelopes with exposed adhesive. In addition, do not use the type of envelope in which the adhesive is exposed after the top layer is peeled off. Serious damage may be caused if the paper covering the adhesive comes off in the machine.
- Do not use envelopes with certain special features. For example, do not use envelopes with a grommet for winding a string to close the flap or envelopes with an open or film-covered window.
- If paper jams occur, load fewer envelopes at once.

Thick Paper

Before loading thick paper, fan it and align the edges. Some thick paper may still have rough edges developed by a paper cutter on the back side. Remove any such rough edges just as with Hagaki (Cardstock) by placing the paper on a flat surface and rubbing the edges gently a few times with a ruler. Printing onto paper with rough edges may cause jams.

NOTE

If the paper is not supplied correctly even after it is smoothed, load the paper with the leading edge raised a few millimeters.

Colored Paper

Colored paper must conform to the specifications.

Basic Paper Specifications (page 7-5)

In addition, the pigments in the paper must be able to withstand the heat of printing (up to 200°C or 392°F).

Preprinted Paper

Preprinted paper must conform to the specifications.

Basic Paper Specifications (page 7-5)

The colored ink must be able to withstand the heat of printing. It must be resistant to silicone oil as well. Do not use paper with a treated surface such as glossy paper used for calendars.

Recycled Paper

Recycled paper must conform to the specifications; however, its whiteness may be considered separately.

Basic Paper Specifications (page 7-5)

NOTE

Before purchasing recycled paper in volume, try testing a sample to ensure satisfactory print quality.

Specifications

IMPORTANT
Specifications are subject to change without notice.

Machine

Item		Description
Type		Desktop
Printing Method		Electrophotography by semiconductor laser
Paper Weight	**Cassette**	60 to 163 g/m^2
	Multipurpose Tray	60 to 220 g/m^2, 209 g/m^2 (Cardstock)
Paper Type	**Cassette**	Plain, Rough, Recycled, Vellum, Preprinted, Bond, Color, Prepunched, Letterhead, Thick, High Quality, Custom (Duplex: Same as Simplex)
	Multipurpose Tray	Plain, Transparency (OHP film), Rough, Vellum, Labels, Recycled, Preprinted, Bond, Cardstock, Color, Prepunched, Letterhead, Envelope, Thick, High Quality, Custom 1 to 8
Paper Size	**Cassette**	A4, A5-R, A5, A6, B5, Letter, Legal, Statement, Executive, Oficio II, Folio, 216 × 340 mm, 16K, B5(ISO), Custom (105 × 148 mm to 216 × 356 mm)
	Multipurpose Tray	A4, A5-R, A5, A6, B5, B6, Folio, 216 × 340 mm, Letter, Legal, Statement, Executive, Oficio II, 16K, B5(ISO), Envelope #10, Envelope #9, Envelope #6 3/4, Envelope Monarch, Envelope DL, Envelope C5, Hagaki (Cardstock), Oufuku Hagaki (Return postcard), Youkei 4, Youkei 2, Custom (70 × 148 mm to 216 × 356 mm)
Printable Area		Print margin for top, bottom and both sides is 4.2 mm
Warm-up Time (23°C/73.4°F, 60%)	**Power on**	15 seconds or less
	Sleep	10 seconds or less
Paper Capacity	**Cassette**	250 sheets (80 g/m^2)*1
	Multipurpose Tray	100 sheets (A4/Letter or smaller) (80 g/m^2)
Output Tray Capacity	**Top tray**	250 sheets (80 g/m^2)
Image Write System		Semiconductor laser and electrophotography
Memory		256 MB
Interface		USB Interface Connector: 1 (Hi-Speed USB) Network interface: 1 (10 BASE-T/100 BASE-TX/1000 BASE-T) USB Port: 1 (Hi-Speed USB) Wireless LAN support*2

*1 Up to upper limit height line in the cassette.
*2 Only ECOSYS P2235dw

Item		Description
Operating Environment	**Temperature**	10 to 32.5°C/50 to 90.5°F
	Humidity	10 to 80 %
	Altitude	3,500 m/11,482 ft maximum
	Brightness	1,500 lux maximum
Dimension (W × D × H)		14.77" × 15.48" × 10.71" 375 × 393 × 272 mm
Weight **(without toner container)**		Approx. 30.9 lb/Approx. 14 kg
Space Required (W × D) **(Using multipurpose tray)**		14.77" × 28.47" 375 × 723 mm
Power Source		120 V Specification Model: 120 V∿60 Hz 8.1 A 230 V Specification Model: 220 to 240 V∿50 Hz 4.2 A
The power consumption of the product in networked standby (If all network ports are connected.)		The information is available at the website below. **http://www.kyoceradocumentsolutions.eu/index/environment/green_products/low_power_consumption.html**
Options		➔ Optional Equipment (page 7-2)

Printer Functions

Item	Description
Printing Speed	A4/A5 35 sheets/min Letter 37 sheets/min Legal 30 sheets/min B5 24 sheets/min A5-R 17 sheets/min A6 17 sheets/min 16K 20 sheets/min
First Print Time **(A4, feed from Cassette)**	6.8 seconds or less
Resolution	300 dpi x 300 dpi, 600 dpi x 600dpi, 1200 equivalent × 1200 dpi equivalent, 1800 dpi equivalent x 600 dpi
Operating System	Windows XP, Windows Server 2003, Windows Vista, Windows 7, Windows 8, Windows 8.1, Windows 10, Windows Server 2008/R2, Windows Server 2012/R2, Mac OS 10.5 or later
Interface	USB Interface Connector: 1 (Hi-Speed USB) Network interface: 1 (10 BASE-T/100 BASE-TX/1000 BASE-T) Wireless LAN support*1
Page Description Language	PRESCRIBE
Emulations	PCL6 (PCL-XL, PCL5c), KPDL3 (PostScript3 compatible), PDF, XPS, OpenXPS

*1 Only ECOSYS P2235dw

Paper Feeder

Item	Description
Paper Supply Method	Friction roller feeder (No. Sheets: 250, 80 g/m^2, 1 cassette)
Paper Size	A4, B5, A5-R, A5, A6, Letter, Legal, Folio, 216 × 340 mm, Statement, Executive, Oficio II, 16K, B5 (ISO), Custom (105 × 148 to 216 × 356 mm)
Supported Paper	Paper weight: 60 to 163 g/m^2 Media types: Plain, Recycled, Special Paper
Dimensions **(W) × (D) × (H)**	14.77" × 15.48" × 3.94" 375 × 393 × 100 mm
Weight	Approx. 6.4 lb/Approx. 2.9 kg

NOTE

Consult your dealer or service representative for recommended paper types.

Glossary

Accessibility

The machine is designed featuring good accessibility even for the elderly and those who are physically challenged or visually impaired.

Apple Talk

AppleTalk offers file sharing and printer sharing and it also enables you to utilize application software that is on another computer on the same AppleTalk network.

Auto Form Feed Timeout

During data transmission, the machine may sometimes have to wait until receiving the next data. This is the auto form feed timeout. When the preset timeout passes, the machine automatically prints output. However, no output is performed if the last page has no data to be printed.

Auto-IP

Auto-IP is a module that enables dynamic IPv4 addresses to be assigned to a device on startup. However, DHCP requires a DHCP server. Auto-IP is a server-less method of choosing an IP address. IP addresses between 169.254.0.0 to 169.254.255.255 are reserved for Auto-IP and assigned automatically.

Auto Paper Selection

A function to automatically select paper in the same size as originals when printing.

Auto Sleep

A mode designed for electrical power saving, activated when the machine is left unused or there is no data transfer for a specific period. In Sleep mode, power consumption is kept to a minimum.

Bonjour

Bonjour, also known as zero-configuration networking, is a service that automatically detects computers, devices and services on an IP network. Bonjour, because an industry-standard IP protocol is used, allows devices to automatically recognize each other without an IP address being specified or DNS server being set. Bonjour also sends and receives network packets by UDP port 5353. If a firewall is enabled, the user must check that UDP port 5353 is left open so that Bonjour will run correctly. Some firewalls are set up so as to reject only certain Bonjour packets. If Bonjour does not run stably, check the firewall settings and ensure that Bonjour is registered on the exceptions list and that Bonjour packets are accepted. If you install Bonjour on Windows XP Service Pack 2 or later, the Windows firewall will be set up correctly for Bonjour.

Default Gateway

This indicates the device, such as a computer or router, that serves as the entrance/exit (gateway) for accessing computers outside the network that you are on. When no specific gateway is designated for a destination IP address, data is sent to the host designated as the Default Gateway.

DHCP (Dynamic Host Configuration Protocol)

Dynamic Host Configuration Protocol (DHCP) that automatically resolves IP addresses, subnet masks, and gateway addresses on a TCP/IP network. DHCP minimizes the load of network management employing a large number of client computers because it relieves individual clients including printers from the IP address being assigned.

DHCP (IPv6)

DHCP (IPv6) is the next-generation of the Internet's Dynamic Host Configuration Protocol and supports IPv6. It extends the BOOTP startup protocol that defines the protocols used for transferring configuration information to hosts on the network. DHCP (IPv6) permits the DHCP server to use its expanded functionality to send configuration parameters to an IPv6 node. Because the network addresses that can be used are allocated automatically, the IPv6 node management workload is reduced in systems where the administrator has to exercise close control over IP address allocation.

dpi (dots per inch)

A unit for resolution, representing the number of dots printed per inch (25.4 mm).

EcoPrint Mode

A printing mode that helps save toner. Copies made in this mode are thus lighter than normal.

Emulation

The function to interpret and execute other printers' page description languages. The machine emulates operation of PCL6, KPDL3 (PostScript 3 compatible).

Enhanced WSD

Proprietary web services.

FTP (File Transfer Protocol)

A protocol to transfer files on the TCP/IP network, whether the Internet or an intranet. Along with HTTP and SMTP/POP, FTP is now frequently used on the Internet.

Grayscale

A computer color expression. Displayed images of this sort are typically composed of shades of gray, varying from black at the weakest intensity to white at the strongest, without any other colors. Gray levels are displayed in numerical levels: that is, white and black only for 1 bit; 256 gray levels (including white and black) for 8 bits; and 65,536 gray levels for 16 bits.

IP Address

An Internet protocol address is a unique number that represents a specific computer or related device on the network. The format of an IP address is four sets of numbers separated by dots, e.g. 192.168.110.171. Each number should be between 0 and 255.

IPP

IPP (Internet Printing Protocol) is a standard that uses TCP/IP networks such as the Internet to enable print jobs to be sent between remote computers and printers. IPP is an extension of the HTTP protocol used to view websites and enables printing to be carried out via routers on printers in remote locations. It also supports the HTTP authentication mechanisms along with SSL server and client authentication as well as encryption.

Job Box

The Job Box function stores print data on the printer and allows users to print single or multiple copies of the stored data later using the printer's operation panel.

KPDL (Kyocera Page Description Language)

Kyocera's PostScript page description language compatible with Adobe PostScript Level 3.

Multipurpose (MP) Tray

The paper supply tray on the front side of the machine. Use this tray instead of the cassettes when printing onto envelopes, Hagaki (Cardstock), transparencies, or labels.

NetBEUI (NetBIOS Extended User Interface)

An interface, developed by IBM in 1985, as an update from NetBIOS. It enables more advanced functions on smaller networks than other protocols such as TCP/IP, etc. It is not suitable for larger networks due to lack of routing capabilities to choose the most appropriate routes. NetBEUI has been adopted by IBM for its OS/2 and Microsoft for its Windows as a standard protocol for file sharing and printing services.

Outline font

With outline fonts, character outlines are represented with numerical expressions and fonts can be enlarged or reduced in different ways by changing the numeric values of those expressions. Printing remains clear even if you enlarge fonts, since the characters are defined with outlines represented with numerical expressions. You can specify the font size in steps of 0.25 points up to 999.75 points.

PDF/A

This is "ISO 19005-1. Document management - Electronic document file format for long-term preservation - Part 1: Use of PDF (PDF/A)", and is a file format based on PDF 1.4. It has been standardized as ISO 19005-1, and is a specialization of PDF, which has been mainly used for printing, for long-term storage. A new part, ISO 19005-2 (PDF/A-2), is currently being prepared.

POP3 (Post Office Protocol 3)

A standard protocol to receive E-mail from the server in which the mail is stored on the Internet or an intranet.

PostScript

A page description language developed by Adobe Systems. It enables flexible font functions and highly-functional graphics, allowing higher quality printing. The first version called Level 1 was launched in 1985, followed by Level 2 that enabled color printing and two-byte languages (e.g. Japanese) in 1990. In 1996, Level 3 was released as an update for the Internet access and PDF format as well as gradual improvements in implementation technologies.

PPM (prints per minute)

This indicates the number of A4 size printouts made in one minute.

Printer Driver

The software to enable you to print data created on any application software. The printer driver for the machine is contained in the DVD enclosed in the package. Install the printer driver on the computer connected to the machine.

RA(Stateless)

The IPv6 router communicates (transmits) information such as the global address prefix using ICMPv6. This information is the Router Advertisement (RA).

ICMPv6 stands for Internet Control Message Protocol, and is a IPv6 standard defined in the RFC 2463 "Internet Control Message Protocol (ICMPv6) for the Internet Protocol Version 6 (IPv6) Specification".

RAM Disk

Using part of the printer's memory as a virtual disk, you can set any amount of memory from overall printer memory as a RAM disk in order to use features such as electronic sorting (shortening print time).

SMTP (Simple Mail Transfer Protocol)

A protocol for E-mail transmission over the Internet or an intranet. It is used for transferring mail between mail servers as well as for sending mail from clients to their servers.

Status Page

The page lists machine conditions.

Subnet Mask

The subnet mask is a way of augmenting the network address section of an IP address.

A subnet mask represents all network address sections as 1 and all host address sections as 0. The number of bits in the prefix indicates the length of the network address. The term "prefix" refers to something added to the beginning and, in this context, indicates the first section of the IP address. When an IP address is written, the length of the network address is indicated by the prefix length after a forward slash (/). For example, "24" in the address "133.210.2.0/24". In this way, "133.210.2.0/24" denotes the IP address "133.210.2.0" with a 24-bit prefix (network section). This new network address section (originally part of the host address) made possible by the subnet mask is referred to as the subnet address. When you enter the subnet mask, be sure to set the "DHCP" setting to "Off".

TCP/IP (Transmission Control Protocol/Internet Protocol)

TCP/IP is a suite of protocols designed to define the way computers and other devices communicate with each other over a network.

TCP/IP (IPv6)

TCP/IP (IPv6) is based on the current Internet protocol, TCP/IP (IPv4). IPv6 is the next-generation Internet protocol and expands the available address space, which resolves the problem of the lack of addresses under IPv4, while also introducing other improvements such as additional security functionality and the capacity to prioritize data transmission.

USB (Universal Serial Bus) 2.0

A USB interface standard for Hi-Speed USB 2.0. The maximum transfer rate is 480 Mbps. This machine is equipped with USB 2.0 for high-speed data transfer.

WPS (Wi-Fi Protected Setup)

WPS is a network security standard created by Wi-Fi Alliance, to make it easy to connect with the wireless devices and set up the Wi-Fi Protected Access. The WPS-supported services can connect to the wireless access points by pushing a button or entering passphrases.

Index

A
Accessibility 7-17
Anti-theft Lock Slot 2-2
AppleTalk 7-17
Auto Form Feed Timeout 7-17
Auto Paper Selection 7-17
Auto Sleep 7-17
Auto-IP 7-17
Automatic 2-Sided Print Function 1-14

B
Bonjour 7-17

C
Cables 2-6
Cassette 1 2-2
Cassette 2 2-5
Cleaning 6-2
    Inside of the Machine 6-2
Command Center RX 2-35
Configuration Tool 4-15
    Accessing 4-15
    Exiting 4-16
    Settings 4-17
Connecting
    LAN Cable 2-7
    Power Cable 2-8
    USB cable 2-8
Connection Method 2-6
Conventions Used in This Guide ix

D
Default Gateway 7-17
DHCP 7-17
DHCP (IPv6) 7-18
Document Processor
    Part Names 2-2
dpi 7-18

E
EcoPrint 7-18
E-mail Settings 2-41
Emulation 7-18
Energy Saving Control Function 1-14
Energy Star (ENERGY STAR?) Program 1-14
Enhanced_WSD 7-18
Environment 1-3

F
Feed Cover 2-3
First Print Time 7-15
Front Cover Open Button 2-2
FTP 7-18
Fuser Cover 2-3

G
Glossary 7-17
Google Cloud Print 4-10
GPL/LGPL 1-11
Grayscale 7-18
Guides Provided with the Machine vii

I
Install
    Macintosh 2-33
    Software 2-25
    Uninstalling 2-32
    Windows 2-26
IP Address 7-18
IPP 7-18

J
Job Box 7-18

K
KPDL 7-18

L
Label 7-10
LAN Cable 2-6
    Connecting 2-7
Legal Information 1-10
Limited Use of This Product 1-9

M
Maintenance Menu 6-10
Monotype Imaging License Agreement 1-12
Mopria 4-10
Multipurpose Tray 2-3, 7-19

N
NetBEUI 7-19
Network Interface 2-6
Network Interface Connector 2-3
Notice 1-2

O
OpenSSL License 1-11
Operation Panel 2-2
Option
    Overview 7-2
    Paper Feeder 7-2
    SD Card 7-3
    ThinPrint Option 7-2
Original
    Size x
Original SSLeay License 1-11
Outline font 7-19

P

Paper
- Appropriate Paper 7-6
- Loading Cardstock 5-4
- Loading Envelopes 5-4
- Loading Paper 3-2
- Size and Media Type 7-5
- Special Paper 7-9
- Specifications 7-5

Paper Feeder 7-2
Paper Jams 6-28
- Cassette 1 6-30
- Cassette 2 6-30, 6-34
- Cassette 3 (500-sheet x 2) 6-34
- Inside of the Machine 6-40
- Multipurpose Tray 6-29
- Rear Cover 1 6-36

Paper Length Guide 2-3, 3-5
Paper Stopper 2-2
Paper Width Guides 2-3, 3-5
Part Names 2-2
PDF/A 7-19
POP3 7-19
PostScript 7-19
Power Cable
- Connecting 2-8

Power Management 1-14
Power Off 2-9
Power On 2-9
Power Switch 2-2
PPM 7-19
Precautions for Use 1-4
Print Settings 4-2, 4-9
Printer
- Print setting 4-2

Printer Driver 7-19
- Help 4-3

Printing from PC 4-4
Printing Speed 7-15
Product Library vii

R

RA (Stateless) 7-19
RAM Disk 7-19
Rear Cover 1 2-2
Recycled Paper 7-12
Regarding Trade Names 1-10
Regular Maintenance 6-2
Resolution 7-15
Resource Saving - Paper 1-14

S

Safety Conventions in This Guide 1-2
SD Card 7-3
Security Precautions when Using Wireless LAN 1-8
SMTP 7-20
Solving Malfunctions 6-11
Specifications 7-13
- Machine 7-13
- Paper Feeder (500-sheet) 7-16
- Printer Functions 7-15

Status Page 7-20
Subnet Mask 7-20
Symbols 1-2

T

TCP/IP 7-20
TCP/IP (IPv4)
- Settings 2-13

TCP/IP (IPv6) 7-18
ThinPrint Option 7-2
Toner Container 2-4
Toner Container Release Button 2-4
Top Tray 1-i, 2-2
Tray Extension 2-3
Troubleshooting 6-11

U

USB 7-20
USB Cable
- Connecting 2-8

USB Interface 2-6
USB Interface Connector 2-3

W

Wi-Fi
- Settings 2-15

Wi-Fi Direct
- Settings 2-20

Wireless Connection 1-8
Wireless Network
- Settings 2-15

QUALITY CERTIFICATE

This machine has passed all quality controls and final inspection

KYOCERA Document Solutions America, Inc.
Headquarters
225 Sand Road,
Fairfield, New Jersey 07004-0008, USA
Phone: +1-973-808-8444
Fax: +1-973-882-6000

Latin America
8240 NW 52nd Terrace Dawson Building, Suite 100
Miami, Florida 33166, USA
Phone: +1-305-421-6640
Fax: +1-305-421-6666

KYOCERA Document Solutions Canada, Ltd.
6120 Kestrel Rd., Mississauga, ON L5T 1S8,
Canada
Phone: +1-905-670-4425
Fax: +1-905-670-8116

KYOCERA Document Solutions
Mexico, S.A. de C.V.
Calle Arquimedes No. 130, 4 Piso, Colonia Polanco
Chapultepec, Delegacion Miguel Hidalgo,
Distrito Federal, C.P. 11560, México
Phone: +52-555-383-2741
Fax: +52-555-383-7804

KYOCERA Document Solutions Brazil, Ltda.
Alameda África, 545, Pólo Empresarial Consbrás,
Tamboré, Santana de Parnaíba, State of São Paulo, CEP
06543-306, Brazil
Phone: +55-11-2424-5353
Fax: +55-11-2424-5304

KYOCERA Document Solutions Chile SpA
Jose Ananias 505, Macul. Santiago, Chile
Phone: +562-2350-7000
Fax: +562-2350-7150

KYOCERA Document Solutions
Australia Pty. Ltd.
Level 3, 6-10 Talavera Road North Ryde N.S.W, 2113,
Australia
Phone: +61-2-9888-9999
Fax: +61-2-9888-9588

KYOCERA Document Solutions
New Zealand Ltd.
Ground Floor, 19 Byron Avenue, Takapuna, Auckland,
New Zealand
Phone: +64-9-415-4517
Fax: +64-9-415-4597

KYOCERA Document Solutions Asia Limited
Unit 3 & 5, 16/F.,Mita Centre, 552-566, Castle Peak Road
Tsuen Wan, New Territories, Hong Kong
Phone: +852-2496-5678
Fax: +852-2610-2063

KYOCERA Document Solutions
(China) Corporation
8F, No. 288 Nanjing Road West, Huangpu District,
Shanghai,200003, China
Phone: +86-21-5301-1777
Fax: +86-21-5302-8300

KYOCERA Document Solutions
(Thailand) Corp., Ltd.
335 Ratchadapisek Road, Wongsawang, Bangsue,
Bangkok 10800,
Thailand
Phone: +66-2-586-0333
Fax: +66-2-586-0278

KYOCERA Document Solutions
Singapore Pte. Ltd.
12 Tai Seng Street #04-01A,
Luxasia Building, Singapore 534118
Phone: +65-6741-8733
Fax: +65-6748-3788

KYOCERA Document Solutions
Hong Kong Limited
Unit 1,2,4,6,8 & 10, 16/F.,Mita Centre, 552-566, Castle
Peak Road Tsuen Wan, New Territories, Hong Kong
Phone: +852-3582-4000
Fax: +852-3185-1399

KYOCERA Document Solutions
Taiwan Corporation
6F., No.37, Sec. 3, Minquan E. Rd.,
Zhongshan Dist., Taipei 104, Taiwan R.O.C.
Phone: +886-2-2507-6709
Fax: +886-2-2507-8432

KYOCERA Document Solutions Korea Co., Ltd.
#3F Daewoo Foundation Bldg 18, Toegye-ro, Jung-gu,
Seoul, Korea
Phone: +822-6933-4050
Fax: +822-747-0084

KYOCERA Document Solutions
India Private Limited
Second Floor, Centrum Plaza, Golf Course Road,
Sector-53, Gurgaon, Haryana 122002, India
Phone: +91-0124-4671000
Fax: +91-0124-4671001

KYOCERA Document Solutions Europe B.V.
Bloemlaan 4, 2132 NP Hoofddorp,
The Netherlands
Phone: +31-20-654-0000
Fax: +31-20-653-1256

KYOCERA Document Solutions Nederland B.V.
Beechavenue 25, 1119 RA Schiphol-Rijk,
The Netherlands
Phone: +31-20-5877200
Fax: +31-20-5877260

KYOCERA Document Solutions (U.K.) Limited
Eldon Court, 75-77 London Road,
Reading, Berkshire RG1 5BS,
United Kingdom
Phone: +44-118-931-1500
Fax: +44-118-931-1108

KYOCERA Document Solutions Italia S.p.A.
Via Monfalcone 15, 20132, Milano, Italy,
Phone: +39-02-921791
Fax: +39-02-92179-600

KYOCERA Document Solutions Belgium N.V.
Sint-Martinusweg 199-201 1930 Zaventem,
Belgium
Phone: +32-2-7209270
Fax: +32-2-7208748

KYOCERA Document Solutions France S.A.S.
Espace Technologique de St Aubin
Route de l'Orme 91195 Gif-sur-Yvette CEDEX,
France
Phone: +33-1-69852600
Fax: +33-1-69853409

KYOCERA Document Solutions Espana, S.A.
Edificio Kyocera, Avda. de Manacor No.2,
28290 Las Matas (Madrid), Spain
Phone: +34-91-6318392
Fax: +34-91-6318219

KYOCERA Document Solutions Finland Oy
Atomitie 5C, 00370 Helsinki,
Finland
Phone: +358-9-47805200
Fax: +358-9-47805390

KYOCERA Document Solutions Europe B.V., Amsterdam (NL) Zürich Branch
Hohlstrasse 614, 8048 Zürich,
Switzerland
Phone: +41-44-9084949
Fax: +41-44-9084950

KYOCERA Bilgitas Document Solutions Turkey A.S.
Gülbahar Mahallesi Otello Kamil Sk. No:6 Mecidiyeköy
34394 Şişli İstanbul, Turkey
Phone: +90-212-356-7000
Fax: +90-212-356-6725

KYOCERA Document Solutions Deutschland GmbH
Otto-Hahn-Strasse 12, 40670 Meerbusch,
Germany
Phone: +49-2159-9180
Fax: +49-2159-918100

KYOCERA Document Solutions Austria GmbH
Altmannsdorferstraße 91, Stiege 1, 2. OG, Top 1, 1120,
Wien, Austria
Phone: +43-1-863380
Fax: +43-1-86338-400

KYOCERA Document Solutions Nordic AB
Esbogatan 16B 164 75 Kista, Sweden
Phone: +46-8-546-550-00
Fax: +46-8-546-550-10

KYOCERA Document Solutions Norge Nuf
Olaf Helsetsv. 6, 0619 Oslo, Norway
Phone: +47-22-62-73-00
Fax: +47-22-62-72-00

KYOCERA Document Solutions Danmark A/S
Ejby Industrivej 60, DK-2600 Glostrup,
Denmark
Phone: +45-70223880
Fax: +45-45765850

KYOCERA Document Solutions Portugal Lda.
Rua do Centro Cultural, 41 (Alvalade) 1700-106 Lisboa,
Portugal
Phone: +351-21-843-6780
Fax: +351-21-849-3312

KYOCERA Document Solutions South Africa (Pty) Ltd.
KYOCERA House, Hertford Office Park,
90 Bekker Road (Cnr. Allandale), Midrand, South Africa
Phone: +27-11-540-2600
Fax: +27-11-466-3050

KYOCERA Document Solutions Russia LLC.
Building 2, 51/4, Schepkina St., 129110, Moscow,
Russia
Phone: +7(495)741-0004
Fax: +7(495)741-0018

KYOCERA Document Solutions Middle East
Dubai Internet City, Bldg. 17,
Office 157 P.O. Box 500817, Dubai,
United Arab Emirates
Phone: +971-04-433-0412

KYOCERA Document Solutions Inc.
2-28, 1-chome, Tamatsukuri, Chuo-ku
Osaka 540-8585, Japan
Phone: +81-6-6764-3555
http://www.kyoceradocumentsolutions.com

© 2016 KYOCERA Document Solutions Inc.
KYOCERA is a trademark of KYOCERA Corporation

KYOCERA
Document Solutions

2016.11
2RWKDEN001